Model No.DBO480 Cordless Finishing Sander

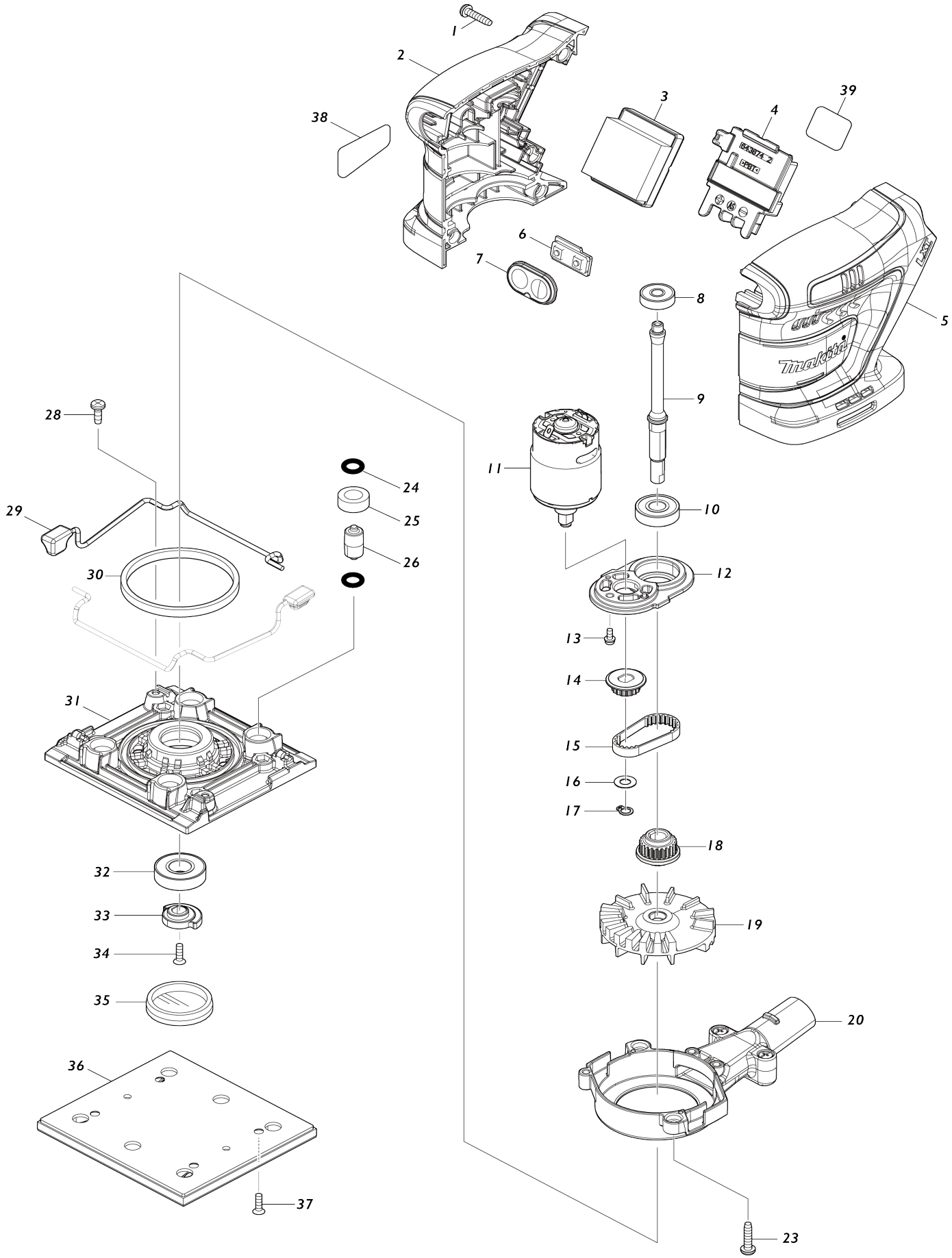

Model No.DBO480 Cordless Finishing Sander

Item No.	Parts No.	Description	Interchangeability	Q'ty	New/ Old	Note1	Note2
001	265995-6	Binding head tapping screw 4X18		5			
002	183U93-9	Housing set		1			
C10	263005-3	Rubber pin 6		2			
002		INC. 5					
003	632S79-3	Controller unit		1			
C10	688164-6	Line filter		1			
C20	654086-2	Receptacle 42486-2		2			
004	643874-2	Terminal		1			
005	183U93-9	Housing set		1			
C10	263005-3	Rubber pin 6		2			
005		INC. 2					
006	632K92-3	Switch unit		1			
007	141B15-1	Switch plate complete		1			
008	210143-2	Ball bearing 626ZZ		1	*		
008-1	211499-6	Ball bearing 626ZZ	O	1			
009	327807-2	Spindle		1			
010	211491-2	Ball bearing 609DDW		1			
011	629B07-5	DC motor		1			
012	413619-0	Motor bracket		1			
013	265173-8	Pan head screw M3X8		1			
014	222200-4	Pulley 7.5-15.5		1			
015	225105-7	Synchro belt 6-108		1			
016	253715-0	Flat washer 6		1			
017	961002-0	Retaining ring (EXT) S-6		1			
018	222199-3	Pulley 7.5-20.3		1			
019	240224-8	Fan 63		1			
020	122B40-1	Fan guide assembly		1			
023	265995-6	Binding head tapping screw 4X18		2			
024	213983-7	O-ring 4		8			
025	424023-8	Sponge sleeve 9		4			
026	318151-8	Foot		4			
028	266020-6	Binding head tapping screw 4X12		2			
029	162259-8	Lever complete		2			
030	424684-4	Sponge 6X87X3		1			
031	413618-2	Base		1			
C10	252176-1	Hex. nut M4		4			
032	211131-2	Ball bearing 6001DDW		1			
033	313141-6	Balancer		1			
034	912117-6	Countersunk head screw M4X12		1			
035	422711-1	Cap 36		1			
036	191Y24-8	Pad complete set		1			
037	912117-6	Countersunk head screw M4X12		4			
038	8115T2-9	Name plate DBO480		1			
039	8115T5-3	Serial No. label DBO480		1			
A01	191Y22-2	Triangle plate complete set		1			

A02	194746-9	Paper dust bag set		1			
A03	192352-4	Abrasive paper set		2	*		
A03-1	D-58671	ABRASIVE SHEET PAPER 60	S	1			
A04	192655-6	Abrasive paper set		1			
A05	135246-0	Dust box assembly		1			
C10	232246-2	Leaf spring		2			
C20	424144-6	Rubber sleeve		1			
C30	450769-0	Dust nozzle		1			
C40	450770-5	Dust box		1			
A06	450066-4	Punch plate		1			
A07A	8048R3-8	Indication label DBO480ZJ		1			
A08A	8048R4-6	Plastic case label DBO480ZJ		2			
A09A	821550-0	Connector plastic case (type 2)		1			
C10	453974-8	Latch		4			
A10A	8351G2-0	Inner tray		1			
A16	D-58693	ABRASIVE SHEET PAPER 100	S	1			
A17	D-58718	ABRASIVE SHEET PAPER 150	S	1			
F01	191Y22-2	Triangle plate complete set		1			
F02	191Y23-0	Rectangle plate complete set		1			
F03	191Y24-8	Pad complete set		1			
F04	191Y25-6	Pad complete set		1			
F08	195133-5	Filter set		1			
F09	195134-3	Filter set		1			

Please state Parts No. when your order.

Print Date 02/10/2026