Model No.DBN640 Cordless Metal Connector Nailer

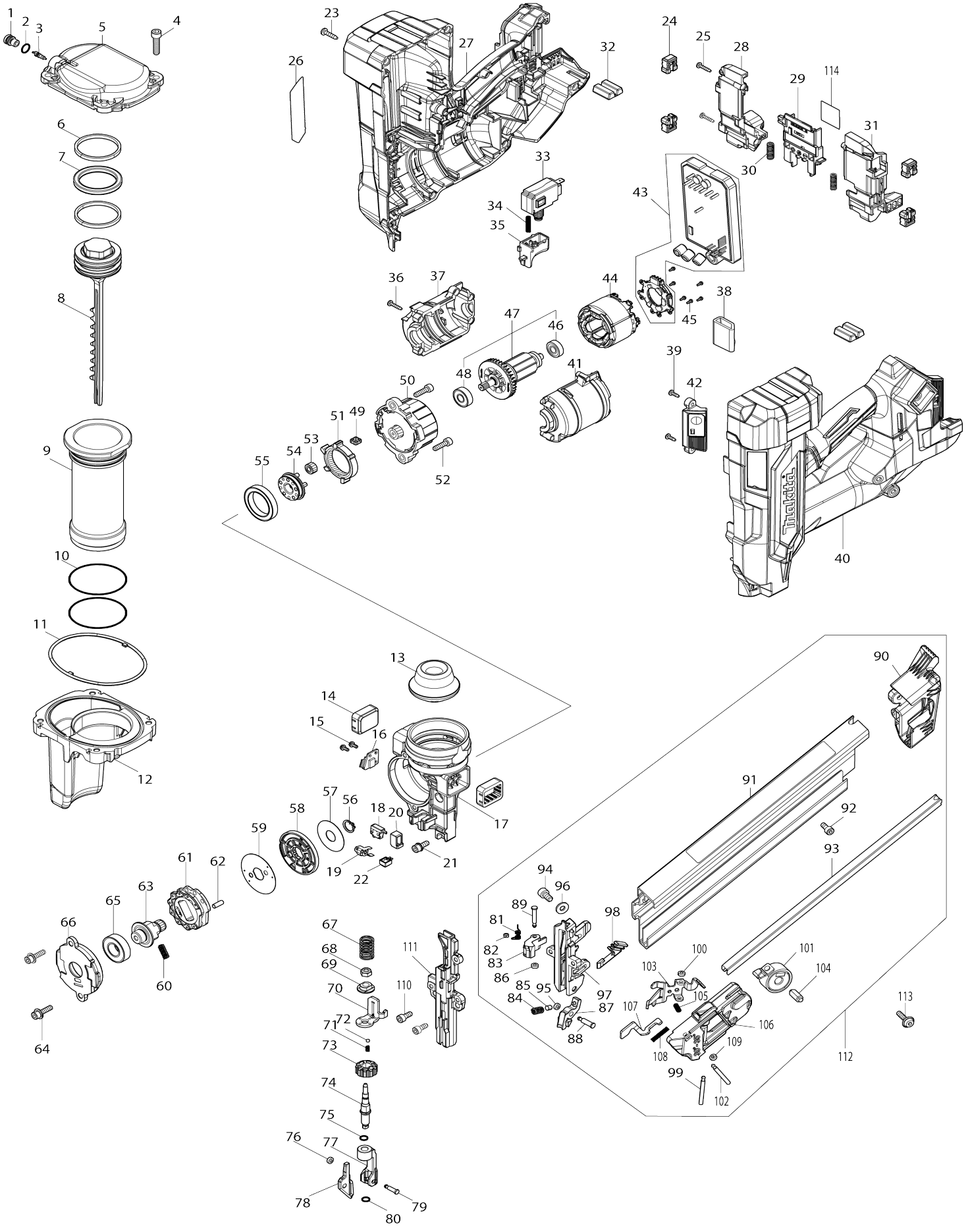

Model No.DBN640 Cordless Metal Connector Nailer

Item No.	Parts No.	Description	Interchangeability	Q'ty	New/ Old	Note1	Note2
001	327D23-0	Valve cap		1			
002	213007-9	O-ring 8		1			
003	243138-0	Valve core		1			
004	922342-1	Hex. socket head bolt M6X25		4			
005	312E84-9	Top cap		1			
006	413X16-4	Slide ring		2			
007	213A70-8	X-ring 40		1	*		
007-1	213B05-5	X-ring 40	<	1			
008	1411E3-7	Driver complete		1			
009	327D22-2	Cylinder		1			
010	213663-5	O-ring 55		2			
011	422B15-3	Seal ring		1			
012	141U65-0	Chamber complete		1			
013	422B14-5	Front cushion		1			
014	422B16-1	Side cushion		2			
015	265173-8	Pan head screw M3X8		2			
016	620S90-7	Sensor circuit		1	*		
016-1	620S90-7	Sensor circuit	O	1			
017	312E81-5	Nose		1			
018	632V61-0	Switch unit		1			
019	232843-4	Leaf spring		1			
020	422666-0	Switch cover		1			
021	251490-2	Hex. socket head bolt M5X14 WR		3			
022	620R02-4	LED circuit		1			
023	265995-6	Binding head tapping screw 4X18		12			
024	422B50-1	Holder cushion		4			
025	266130-9	Binding head tapping screw 3X16		2			
026	8154P8-5	DBN640 NAME PLATE		1			
027	1831P2-0	Housing set		1			
C10	263032-0	Rubber pin 4		2			
027		INC. 40					
028	1830M8-1	Battery holder set		1			
C10	263005-3	Rubber pin 6		2			
028		INC. 31					
029	654908-6	Terminal		1	*		
029-1	654969-6	Terminal	<	1			
030	232876-9	Compression spring 7		2			
031	1830M8-1	Battery holder set		1			
C10	263005-3	Rubber pin 6		2			
031		INC. 28					
032	422B17-9	Battery cushion		2			
033	650060-8	Switch C3JR-5BM-PAND-2		1			
034	232848-4	Compression spring 4		1			
035	413X17-2	Trigger		1			
036	266130-9	Binding head tapping screw 3X16		5			

037	1830P6-6	Motor housing set		1			
037		INC. 41					
038	685722-9	Sponge		1			
039	266007-8	Binding head tapping screw 3X10		2			
040	1831P2-0	Housing set		1			
C10	263032-0	Rubber pin 4		2			
040		INC. 27					
041	1830P6-6	Motor housing set		1			
041		INC. 37					
042	620S72-9	Switch circuit complete		1			
043	620R67-6	Controller		1			
044	629B61-9	Stator		1			
045	652119-7	Pan head screw M2X6		6			
046	210169-4	Ball bearing 607LLB		1			
047	519862-0	Rotor assembly		1			
047		INC. 46,48					
048	210223-4	Ball bearing 608ZZ		1			
049	422B18-7	Gear cushion		4			
050	122G07-9	Gear assembly		1			
051	227B41-5	Internal gear 44		1			
052	265853-6	Hex. socket head bolt M5X18		2			
053	227B54-6	Spur gear 13		5			
054	141U61-8	Carrier complete		1			
055	211423-9	Ball bearing 6806DDW		1			
056	961053-3	Retaining ring (EXT) S-13		1			
057	253595-4	Flat washer 14		1			
058	1411E4-5	Holder complete		1			
059	347C07-6	Pin cover		1			
060	232846-8	Compression spring 4		1			
061	327D06-0	Lifter		1			
062	256A54-3	Pin 5		9			
063	327D05-2	Lifter shaft		1			
064	265D66-3	Hex. socket head bolt M5X20 WG		2			
065	211236-8	Ball bearing 6002DDW		1			
066	312E82-3	Lifter cap		1			
067	232847-6	Compression spring 12		1			
068	264027-6	Hex. lock nut M6-10		1			
069	327D17-5	Adjuster sleeve		1			
070	347C06-8	Contact arm		1			
071	232417-1	Compression spring 3		1			
072	216001-0	Steel ball 3.5		1			
073	413X07-5	Adjuster dial		1			
074	327D20-6	Adjuster shaft		1			
075	213A98-6	O-ring 5		1	*		
075-1	213005-3	O-ring 5	O	1			
076	262054-7	Urethane ring 3		1			
077	313644-0	Contact top		1			
078	313645-8	Top nail guide		1			
079	256B04-4	Pin 4		1			
080	213A98-6	O-ring 5		1	*		
080-1	213005-3	O-ring 5	O	1			

081	232937-5	Torsion spring 5		1			
082	257A83-9	Sleeve 5		1			
083	313642-4	Nail supporter		1			
084	232936-7	Compression spring 5		1			
085	263042-7	RUBBER PIN 5		1			
086	262054-7	Urethane ring 3		1			
087	313641-6	Under nail guide		1			
088	256B03-6	Pin 5		1			
089	256B02-8	Pin 4		1			
090	4132M3-2	Magazine cap		1			
091	1411E2-9	Magazine complete		1			
C10	8098G9-4	CAUTION LABEL		1			
092	922212-4	Hex. socket head bolt M5X12		1			
093	347D64-0	Nail rail		1			
094	265E97-8	Hex. socket head bolt M6X12		1			
095	262054-7	Urethane ring 3		1			
096	267214-6	Flat washer 6		1			
097	313640-8	Under driver guide		1			
098	422B13-7	Pusher cushion		1			
099	256A57-7	Pin 4		1			
100	262054-7	Urethane ring 3		1			
101	141U43-0	Spiral spring complete		1			
102	256A57-7	Pin 4		1			
103	347D63-2	Pusher		1			
104	256428-2	Shoulder pin 5-8		1			
105	234084-8	Compression spring 3		1			
106	4132M4-0	Pusher lever		1			
107	347C09-2	Lock plate		1			
108	233339-8	Compression spring 3		1			
109	262054-7	Urethane ring 3		1			
110	265D55-8	Hex. socket head bolt M5X12		2			
111	313643-2	Driver guide		1			
112	122J00-1	Magazine assembly		1			
112		INC. 81-109					
113	265E40-7	Hex. socket head shoulder bolt		1			
114	8154R4-7	DBN640 SERIAL NO. LABEL		1			
A01	141X57-7	Hook assembly		1			
A02	265D55-8	Hex. socket head bolt M5X12		3			
A03	347C14-9	Hook		1			
A04	783202-0	Hex. wrench 4		1			
A05	821943-1	Plastic case		1			
C10	162271-8	Latch		2			
A06	836630-9	Inner tray		1			