Model No.DBN900 Cordless Framing Nailer

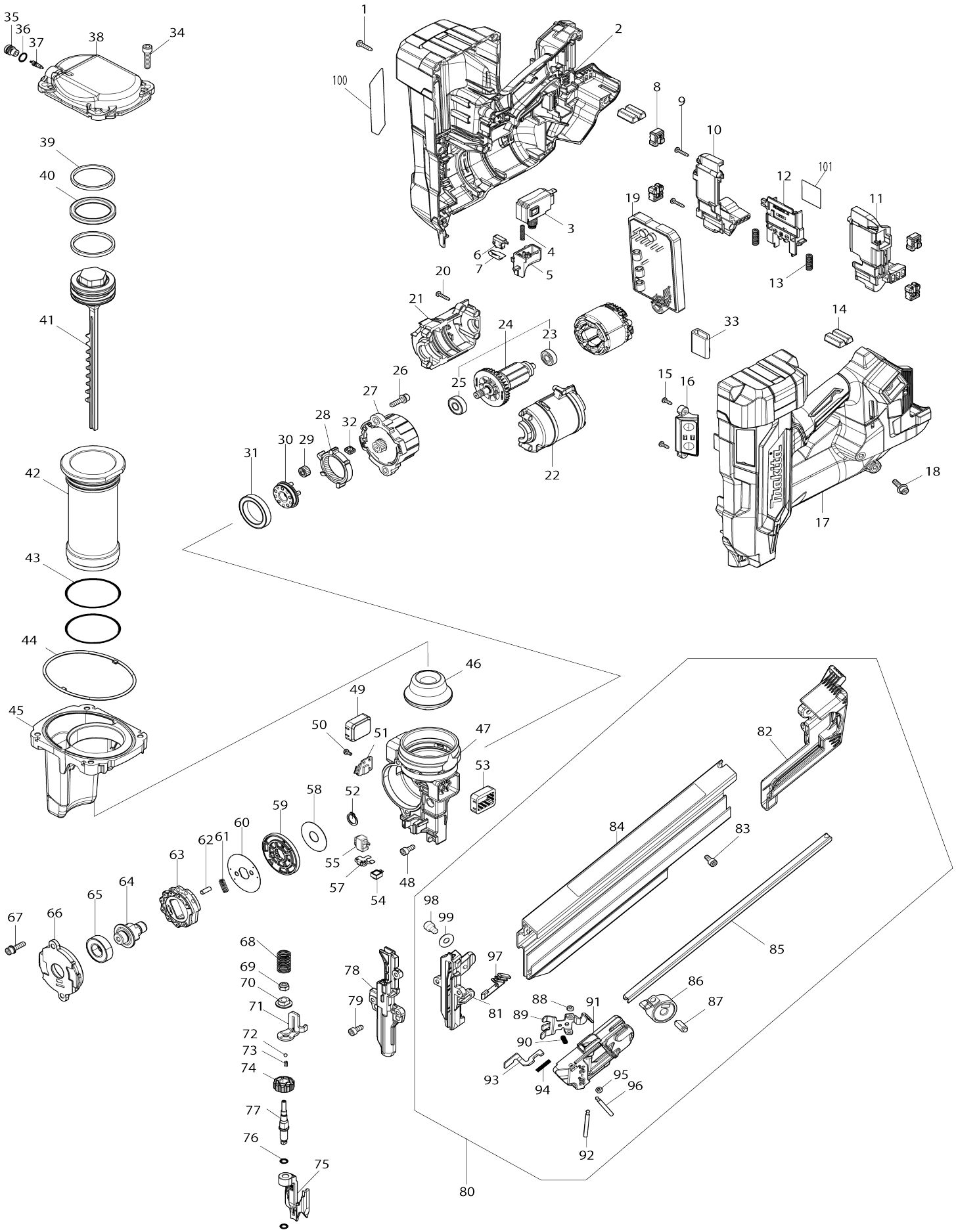

Model No.DBN900 Cordless Framing Nailer

Item No.	Parts No.	Description	Interchangeability	Q'ty	New/ Old	Note1	Note2
001	265995-6	Binding head tapping screw 4X18		12			
002	1830P5-8	Housing set		1	*		
002		INC. 17			*		
002-1	1831E2-3	Housing set	<	1	*		
C10	263032-0	Rubber pin 4		2	*		
002-1		INC. 17			*		
002-2	1831K8-3	Housing set	S	1	*		
C10	263032-0	Rubber pin 4		2	*		
002-2		INC. 17			*		
002-3	1831K8-3	Housing set	O	1	*		
C10	263032-0	Rubber pin 4		2	*		
002-3		INC. 17			*		
002-4	1831P2-0	Housing set	S	1	*		
C10	263032-0	Rubber pin 4		2	*		
002-4		INC. 17			*		
002-5	1831P2-0	Housing set	O	1			
C10	263032-0	Rubber pin 4		2			
002-5		INC. 17					
003	650060-8	Switch C3JR-5BM-PAND-2		1			
004	232848-4	Compression spring 4		1			
005	413X17-2	Trigger		1			
006	632V61-0	Switch unit		1			
007	232842-6	Leaf spring		1	*		
007-1	232964-2	Leaf spring	S	1			
008	422B50-1	Holder cushion		4			
009	266130-9	Binding head tapping screw 3X16		2			
010	1830M8-1	Battery holder set		1			
C10	263005-3	Rubber pin 6		2			
010		INC. 11					
011	1830M8-1	Battery holder set		1			
C10	263005-3	Rubber pin 6		2			
011		INC. 10					
012	654908-6	Terminal		1			
013	232876-9	Compression spring 7		2			
014	422B17-9	Battery cushion		2			
015	266007-8	Binding head tapping screw 3X10		2			
016	620P22-6	Switch circuit complete		1	*		
016-1	620S71-1	Switch circuit complete	O	1			
017	1830P5-8	Housing set		1	*		
017		INC. 2			*		
017-1	1831E2-3	Housing set	<	1	*		
C10	263032-0	Rubber pin 4		2	*		
017-1		INC. 2			*		
017-2	1831K8-3	Housing set	S	1	*		
C10	263032-0	Rubber pin 4		2	*		

017-2		INC. 2			*		
017-3	1831K8-3	Housing set	O	1	*		
C10	263032-0	Rubber pin 4		2	*		
017-3		INC. 2			*		
017-4	1831P2-0	Housing set	S	1	*		
C10	263032-0	Rubber pin 4		2	*		
017-4		INC. 2			*		
017-5	1831P2-0	Housing set	O	1			
C10	263032-0	Rubber pin 4		2			
017-5		INC. 2					
018	265D66-3	Hex. socket head bolt M5X20 WG		1	*		
018-1	265E40-7	Hex. socket head shoulder bolt	S	1			
019	629C77-0	Stator complete		1	*		
019-1	629D43-3	Stator complete	S	1	*		
019-2	629D43-3	Stator complete	S	1			
020	266130-9	Binding head tapping screw 3X16		5			
021	1830P6-6	Motor housing set		1			
021		INC. 22					
022	1830P6-6	Motor housing set		1			
022		INC. 21					
023	210169-4	Ball bearing 607LLB		1			
024	519862-0	Rotor assembly		1			
024		INC. 23,25					
025	210223-4	Ball bearing 608ZZ		1			
026	922233-6	Hex. socket head bolt M5X20 WR		2	*		
026-1	265853-6	Hex. socket head bolt M5X18	<	2			
027	122G07-9	Gear assembly		1			
028	227B41-5	Internal gear 44		1			
029	227B54-6	Spur gear 13		5			
030	141U61-8	Carrier complete		1			
031	211423-9	Ball bearing 6806DDW		1			
032	422B18-7	Gear cushion		4			
033	685722-9	Sponge		1			
034	922342-1	Hex. socket head bolt M6X25		4			
035	327D23-0	Valve cap		1			
036	213007-9	O-ring 8		1			
037	243138-0	Valve core		1			
038	312E84-9	Top cap		1			
039	413X16-4	Slide ring		2			
040	213A70-8	X-ring 40		1	*		
040-1	213B05-5	X-ring 40	<	1			
041	141U59-5	Driver complete		1			
042	327D22-2	Cylinder		1			
043	213663-5	O-ring 55		2			
044	422B15-3	Seal ring		1			
045	141U65-0	Chamber complete		1			
046	422B14-5	Front cushion		1			
047	312E81-5	Nose		1			
048	265D55-8	Hex. socket head bolt M5X12		3	*		
048-1	251490-2	Hex. socket head bolt M5X14 WR	<	3			
049	422B16-1	Side cushion		1			

050	265173-8	Pan head screw M3X8		2			
051	620N67-2	Sensor circuit		1	*		
051-1	620S90-7	Sensor circuit	S	1	*		
051-2	620S90-7	Sensor circuit	O	1			
052	961053-3	Retaining ring (EXT) S-13		1			
053	422B16-1	Side cushion		1			
054	620R02-4	LED circuit		1			
055	137163-0	Switch assembly		1			
057	232843-4	Leaf spring		1			
058	253595-4	Flat washer 14		1			
059	141U60-0	Holder complete		1			
060	347C07-6	Pin cover		1			
061	232846-8	Compression spring 4		1			
062	256A54-3	Pin 5		9			
063	327D06-0	Lifter		1			
064	327D05-2	Lifter shaft		1			
065	211236-8	Ball bearing 6002DDW		1			
066	312E82-3	Lifter cap		1			
067	922233-6	Hex. socket head bolt M5X20 WR		2	*		
067-1	265D66-3	Hex. socket head bolt M5X20 WG	<	2			
068	232847-6	Compression spring 12		1			
069	264027-6	Hex. lock nut M6-10		1			
070	327D17-5	Adjuster sleeve		1			
071	347C06-8	Contact arm		1			
072	216001-0	Steel ball 3.5		1			
073	232417-1	Compression spring 3		1			
074	413X07-5	Adjuster dial		1			
075	313502-0	Contact top		1	*		
075-1	313673-3	Contact top	S	1			
076	213005-3	O-ring 5		2			
077	327D20-6	Adjuster shaft		1			
078	313503-8	Driver guide		1			
079	265D55-8	Hex. socket head bolt M5X12		2			
080	122H35-0	Magazine assembly		1	*		
080		INC. 81-99			*		
080-1	122L31-2	Magazine assembly	S	1			
080-1		INC. 81-99					
081	313504-6	Under driver guide		1			
082	413X12-2	Magazine cap		1			
083	922212-4	Hex. socket head bolt M5X12		1			
084	141V05-4	Magazine complete		1	*		
C10	8076T9-7	Caution label		1	*		
084-1	1413N1-6	Magazine complete	S	1			
C10	8076T9-7	Caution label		1			
085	347C08-4	Nail rail		1			
086	141U43-0	Spiral spring complete		1			
087	256428-2	Shoulder pin 5-8		1			
088	262054-7	Urethane ring 3		1			
089	347C10-7	Pusher		1			
090	234084-8	Compression spring 3		1			
091	413X13-0	Pusher lever		1			
092	256A57-7	Pin 4		1			

093	347C09-2	Lock plate		1			
094	232354-9	Compression spring 3		1	*		
094-1	233339-8	Compression spring 3	<	1			
095	262054-7	Urethane ring 3		1			
096	256A57-7	Pin 4		1			
097	422B13-7	Pusher cushion		1			
098	265915-0	Hex. socket head bolt M6X10		1			
099	267426-1	Flat washer 7		1	*		
099-1	267214-6	Flat washer 6	<	1			
100	8146W2-5	Name plate DBN900		1			
101	8146W3-3	Serial No. label DBN900		1			
A01	141X57-7	Hook assembly		1			
A02	265D55-8	Hex. socket head bolt M5X12		3			
A03	347C14-9	Hook		1			
A04	4130T1-3	Nose adapter		1	*		
A04-1	4133Y2-4	Nose adapter	<	1			
A05	783202-0	Hex. wrench 4		1			
A06	824937-5	Plastic case		1	*		
C10	162271-8	Latch		2	*		
A06-1	821943-1	Plastic case	X	1			
C10	162271-8	Latch		2			
A07	836321-2	Inner tray		1	*		
A07-1	836630-9	Inner tray	X	1			
A08B	450128-8	Battery cover		1			
A09B	***DC18RC	DC18RC FAST CHARGER		1			
A09B		COMPO-PARTS					
A10B	197280-8	Battery BL1850B set		2			
F01	1914P1-6	Extended capacity magazine set		1	*		
F01-1	1917P3-0	Extended capacity magazine set	<	1			
C10	265E40-7	Hex. socket head shoulder bolt		1			