Model No.DBN610 Cordless Finish Nailer

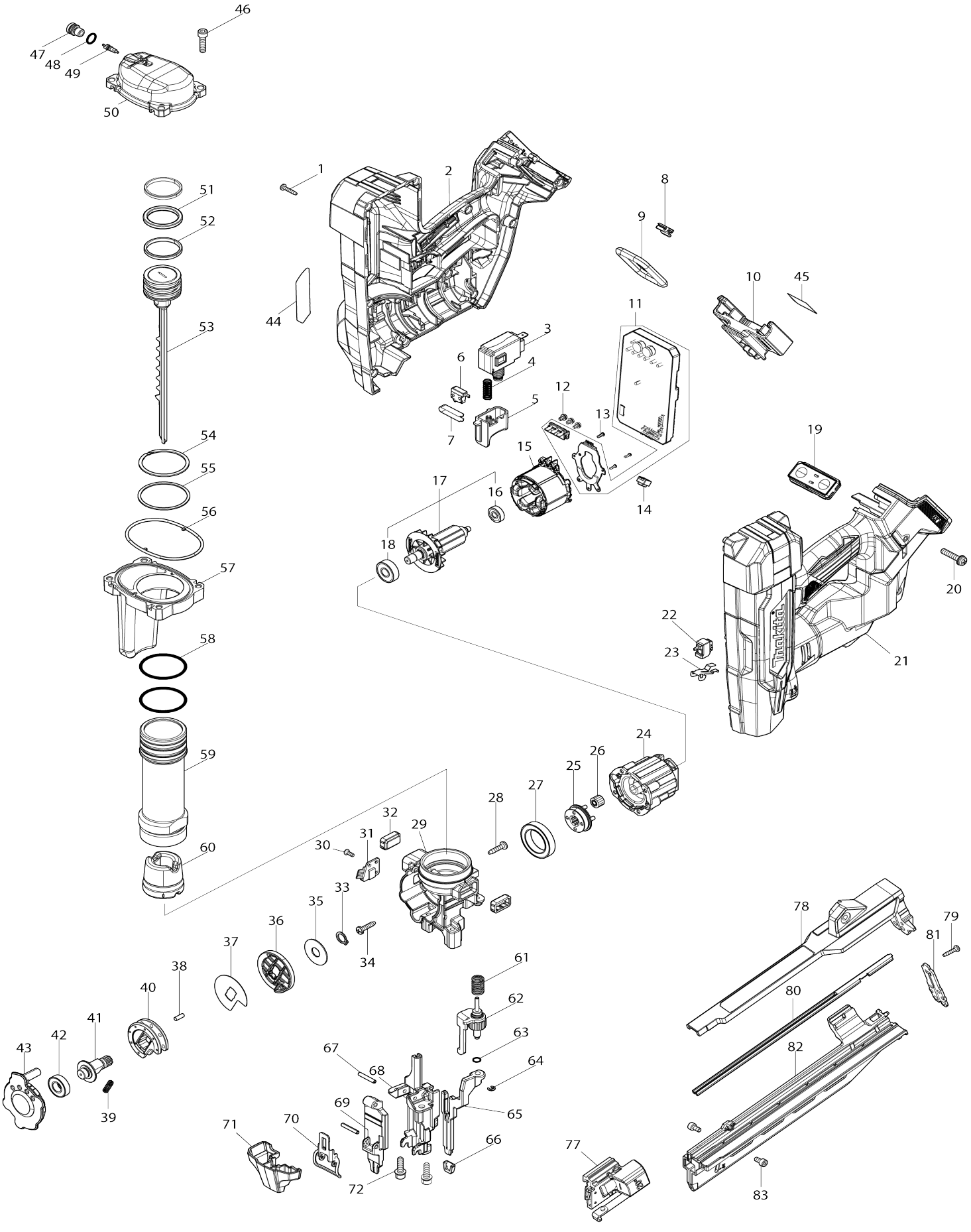

Model No.DBN610 Cordless Finish Nailer

Item No.	Parts No.	Description	Interchangeability	Q'ty	New/ Old	Note1	Note2
001	266130-9	Binding head tapping screw 3X16		12			
002	1831D9-2	Housing set		1			
C10	263005-3	Rubber pin 6		2			
C20	252359-3	Insert nut M5-7		1			
C30	252884-4	Insert nut M4X8		2			
002		INC. 21					
003	650060-8	Switch C3JR-5BM-PAND-2		1			
004	232884-0	Compression spring 7		1			
005	4130V7-5	Trigger		1	*		
005-1	1413L6-2	Trigger complete	O	1			
006	632V61-0	Switch unit		1			
007	232889-0	Leaf spring		1	*		
007-1	232889-0	Leaf spring	O	1			
008	424026-2	Cushion		1			
009	424030-1	Cushion		1			
010	654918-3	Terminal		1			
011	620P15-3	Controller		1			
012	652069-6	Flat head screw M3X6		3			
013	266490-9	Pan head tapping screw 2X6		3			
014	620P87-8	LED circuit		1			
015	629A28-1	Stator		1			
016	210231-5	Ball bearing 625ZZ		1			
017	519865-4	Rotor assembly		1	*		
017		INC. 16,18			*		
017-1	519935-9	ROTOR ASS'Y	O	1			
017-1		INC. 16,18					
018	210005-4	Ball bearing 608DDW		1			
019	620P97-5	Switch circuit complete		1			
020	911243-8	Pan head screw M5X25 WR		1			
021	1831D9-2	Housing set		1			
C10	263005-3	Rubber pin 6		2			
C20	252359-3	Insert nut M5-7		1			
C30	252884-4	Insert nut M4X8		2			
021		INC. 2					
022	140W22-7	Switch complete		1			
023	232890-5	Leaf spring		1			
024	122G78-6	Gear assembly		1			
025	141Y54-9	Carrier complete		1			
026	227B76-6	Spur gear 11		4			
027	210168-6	Ball bearing 6805DDW		1			
028	265995-6	Binding head tapping screw 4X18		2	*		
028-1	265E16-4	Tapping screw 4X18	<	2			
029	141Y62-0	Inner housing complete		1			
030	911007-0	Pan head screw M3X8		1			
031	620P94-1	Sensor circuit		1			
032	422B84-4	Side cushion		2			

033	961006-2	Retaining ring (EXT) S-10		1			
034	265995-6	Binding head tapping screw 4X18		4	*		
034-1	265E16-4	Tapping screw 4X18	<	4			
035	347C87-2	Flat washer 10		1			
036	162D46-9	Holder complete		1			
037	347C81-4	Lifter plate		1			
038	256173-9	Pin 3.5		7			
039	232885-8	Compression spring 4		1			
040	327E10-5	Lifter		1			
041	327E09-0	Lifter shaft		1			
042	211391-6	Ball bearing 6900LLU		1			
043	4130V1-7	Lifter cap		1			
044	8148N4-0	Name plate DBN610		1			
045	8148N6-6	Serial No. label DBN610		1			
046	922232-8	Hex. socket head bolt M5X20		4			
047	327D23-0	Valve cap		1			
048	213007-9	O-ring 8		1			
049	243138-0	Valve core		1			
050	312H30-0	Top cap		1			
051	213A79-0	X-ring 28		1	*		
051-1	213B08-9	X-RING 28	<	1			
052	4130U7-8	Slide ring		2			
053	137237-7	Driver assembly		1	*		
053-1	137237-7	Driver assembly	O	1			
054	259093-6	Spiral retaining ring (EXT) 42		1			
055	253612-0	Flat washer 42		1			
056	422B85-2	Seal ring		1			
057	141Y59-9	Chamber complete		1			
C10	8076U1-0	Caution label		1			
058	213513-4	O-ring 39		2	*		
058-1	213A96-0	O-ring 39	<	2			
059	327E07-4	Cylinder		1			
060	422B83-6	Front cushion		1			
061	232886-6	Compression spring 9		1			
062	141Y61-2	Adjuster complete		1			
063	213021-5	O-ring 5		1			
064	961017-7	Stop ring (EXT) E-3		1			
065	313595-7	Center plate		1			
066	422B86-0	Nose adapter		1			
067	951069-6	Spring pin 3-20		2			
068	313573-7	Under driver guide		1			
069	313571-1	Driver guide		1			
070	162D45-1	Latch		1			
071	4130U6-0	Latch cover		1			
072	922228-9	Hex. socket head bolt M5X18 WR		2			
077	137241-6	Pusher assembly		1			
078	141Y51-5	Magazine end complete		1			
C10	8082B2-4	Caution label		1			
079	266130-9	Binding head tapping screw 3X16		2			
080	347C86-4	Nail rail		1			

081	347C85-6	End plate		1			
082	4130V9-1	Magazine		1			
083	265911-8	Hex. socket head bolt M4X8		2			
A01	251314-2	Truss head screw M4X12		1			
A02	346317-0	Hook		1			
A03	422B86-0	Nose adapter		2			

Please state Parts No. when your order.

Print Date 06/01/2026