Model No.DBN601 Cordless Finish Nailer

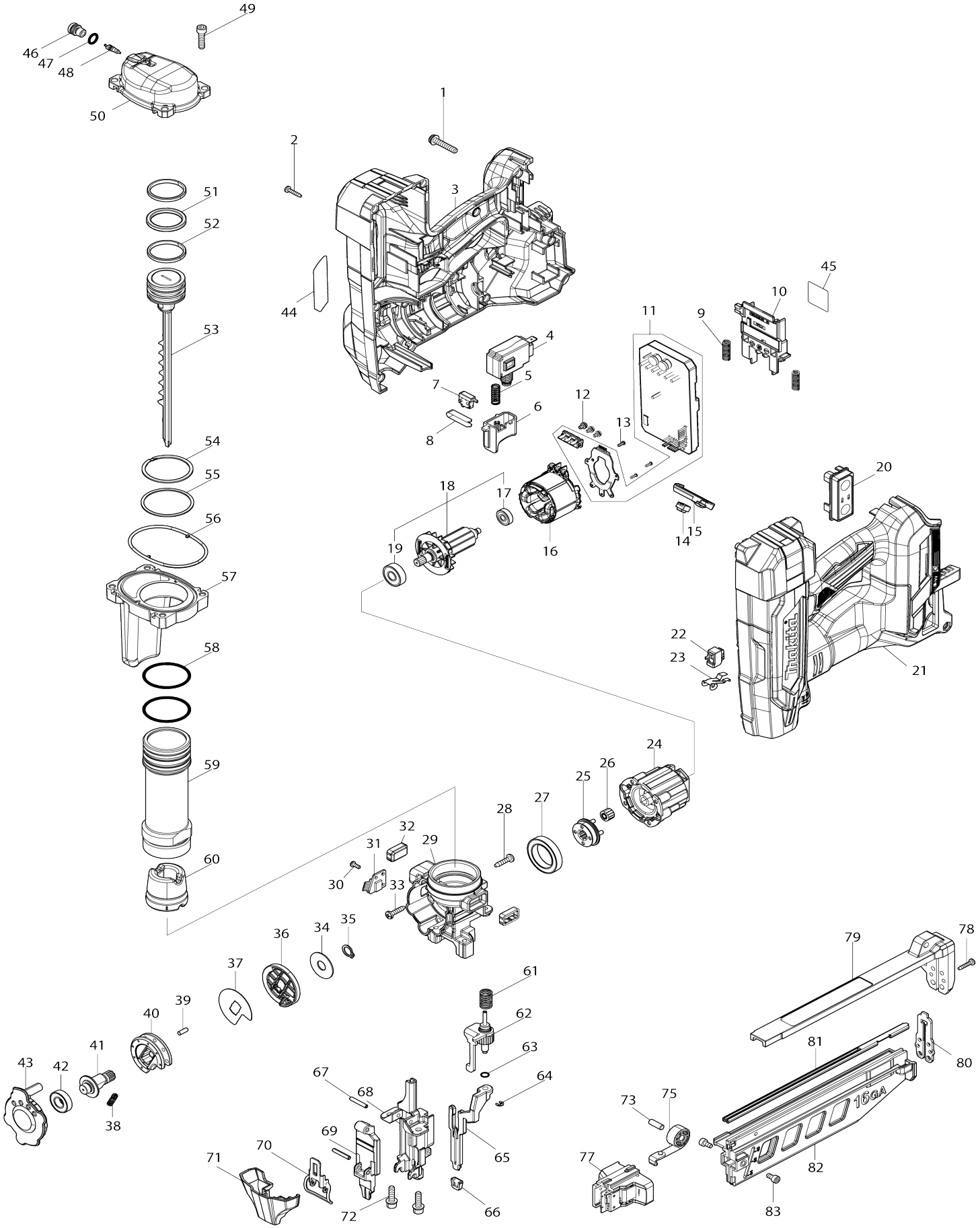

# Model No.DBN601 Cordless Finish Nailer

| Item No. | Parts No. | Description | Interchangeability | Q'ty | New/ Old | Note1 | Note2 |
|---|---|---|---|---|---|---|---|
| 001 | 911248-8 | Pan head screw M5X28 WR | | 1 | | | |
| 002 | 266130-9 | Binding head tapping screw 3X16 | | 11 | | | |
| 003 | 1831D8-4 | Housing set | | 1 | | | |
| C10 | 263005-3 | Rubber pin 6 | | 2 | | | |
| C20 | 252126-6 | Hex. lock nut M4-7 | | 2 | | | |
| C30 | 252103-8 | Hex. lock nut M5-8 | | 1 | | | |
| 003 | | INC. 21 | | | | | |
| 004 | 650060-8 | Switch C3JR-5BM-PAND-2 | | 1 | | | |
| 005 | 232884-0 | Compression spring 7 | | 1 | | | |
| 006 | 4130V7-5 | Trigger | | 1 | * | | |
| 006-1 | 1413L6-2 | Trigger complete | O | 1 | | | |
| 007 | 632V61-0 | Switch unit | | 1 | | | |
| 008 | 232889-0 | Leaf spring | | 1 | * | | |
| 008-1 | 232889-0 | Leaf spring | O | 1 | | | |
| 009 | 232876-9 | Compression spring 7 | | 2 | | | |
| 010 | 654908-6 | Terminal | | 1 | | | |
| 011 | 620P14-5 | Controller | | 1 | | | |
| 012 | 652069-6 | Flat head screw M3X6 | | 3 | | | |
| 013 | 266490-9 | Pan head tapping screw 2X6 | | 3 | | | |
| 014 | 620P87-8 | LED circuit | | 1 | | | |
| 015 | 4130V8-3 | LED holder | | 1 | | | |
| 016 | 629A28-1 | Stator | | 1 | | | |
| 017 | 210231-5 | Ball bearing 625ZZ | | 1 | | | |
| 018 | 519865-4 | Rotor assembly | | 1 | * | | |
| 018 | | INC. 17,19 | | | * | | |
| 018-1 | 519935-9 | ROTOR ASS'Y | O | 1 | | | |
| 018-1 | | INC. 17,19 | | | | | |
| 019 | 210005-4 | Ball bearing 608DDW | | 1 | | | |
| 020 | 620P95-9 | Switch circuit complete | | 1 | | | |
| 021 | 1831D8-4 | Housing set | | 1 | | | |
| C10 | 263005-3 | Rubber pin 6 | | 2 | | | |
| C20 | 252126-6 | Hex. lock nut M4-7 | | 2 | | | |
| C30 | 252103-8 | Hex. lock nut M5-8 | | 1 | | | |
| 021 | | INC. 3 | | | | | |
| 022 | 140W22-7 | Switch complete | | 1 | | | |
| 023 | 232890-5 | Leaf spring | | 1 | | | |
| 024 | 122G78-6 | Gear assembly | | 1 | | | |
| 025 | 141Y54-9 | Carrier complete | | 1 | | | |
| 026 | 227B76-6 | Spur gear 11 | | 4 | | | |
| 027 | 210168-6 | Ball bearing 6805DDW | | 1 | | | |
| 028 | 265995-6 | Binding head tapping screw 4X18 | | 2 | * | | |
| 028-1 | 265E16-4 | Tapping screw 4X18 | < | 2 | | | |
| 029 | 141Y58-1 | Inner housing complete | | 1 | | | |
| 030 | 911007-0 | Pan head screw M3X8 | | 1 | | | |
| 031 | 620P94-1 | Sensor circuit | | 1 | | | |
| 032 | 422B84-4 | Side cushion | | 2 | | | |

| | | | | | | | |
|---|---|---|---|---|---|---|---|
| 033 | 265995-6 | Binding head tapping screw 4X18 | | 4 | * | | |
| 033-1 | 265E16-4 | Tapping screw 4X18 | < | 4 | | | |
| 034 | 347C87-2 | Flat washer 10 | | 1 | | | |
| 035 | 961006-2 | Retaining ring (EXT) S-10 | | 1 | | | |
| 036 | 162D46-9 | Holder complete | | 1 | | | |
| 037 | 347C81-4 | Lifter plate | | 1 | | | |
| 038 | 232885-8 | Compression spring 4 | | 1 | | | |
| 039 | 256173-9 | Pin 3.5 | | 7 | | | |
| 040 | 327E10-5 | Lifter | | 1 | | | |
| 041 | 327E09-0 | Lifter shaft | | 1 | | | |
| 042 | 211391-6 | Ball bearing 6900LLU | | 1 | | | |
| 043 | 4130V1-7 | Lifter cap | | 1 | | | |
| 044 | 8148M1-9 | Name plate DBN601 | | 1 | | | |
| 045 | 8148M3-5 | Serial No. label DBN601 | | 1 | | | |
| 046 | 327D23-0 | Valve cap | | 1 | | | |
| 047 | 213007-9 | O-ring 8 | | 1 | | | |
| 048 | 243138-0 | Valve core | | 1 | | | |
| 049 | 922232-8 | Hex. socket head bolt M5X20 | | 4 | | | |
| 050 | 312H30-0 | Top cap | | 1 | | | |
| 051 | 213A79-0 | X-ring 28 | | 1 | * | | |
| 051-1 | 213B08-9 | X-RING 28 | < | 1 | | | |
| 052 | 4130U7-8 | Slide ring | | 2 | | | |
| 053 | 137239-3 | Driver assembly | | 1 | * | | |
| 053-1 | 137239-3 | Driver assembly | O | 1 | | | |
| 054 | 259093-6 | Spiral retaining ring (EXT) 42 | | 1 | | | |
| 055 | 253612-0 | Flat washer 42 | | 1 | | | |
| 056 | 422B85-2 | Seal ring | | 1 | | | |
| 057 | 141Y59-9 | Chamber complete | | 1 | | | |
| C10 | 8076U1-0 | Caution label | | 1 | | | |
| 058 | 213513-4 | O-ring 39 | | 2 | * | | |
| 058-1 | 213A96-0 | O-ring 39 | < | 2 | | | |
| 059 | 327E07-4 | Cylinder | | 1 | | | |
| 060 | 422B83-6 | Front cushion | | 1 | | | |
| 061 | 232886-6 | Compression spring 9 | | 1 | | | |
| 062 | 141Y56-5 | Adjuster complete | | 1 | | | |
| 063 | 213021-5 | O-ring 5 | | 1 | | | |
| 064 | 961017-7 | Stop ring (EXT) E-3 | | 1 | | | |
| 065 | 313594-9 | Center plate | | 1 | | | |
| 066 | 422B86-0 | Nose adapter | | 1 | | | |
| 067 | 951069-6 | Spring pin 3-20 | | 2 | | | |
| 068 | 313570-3 | Under driver guide | | 1 | | | |
| 069 | 313670-9 | Driver guide | | 1 | | | |
| 070 | 162D45-1 | Latch | | 1 | | | |
| 071 | 4130V2-5 | Latch cover | | 1 | | | |
| 072 | 922228-9 | Hex. socket head bolt M5X18 WR | | 2 | | | |
| 073 | 268225-4 | Pin 5 | | 1 | | | |
| 075 | 141Y52-3 | Spiral spring complete | | 1 | | | |
| 077 | 137240-8 | Pusher assembly | | 1 | * | | |
| 077-1 | 137240-8 | Pusher assembly | O | 1 | | | |
| 078 | 266130-9 | Binding head tapping screw 3X16 | | 2 | | | |

| | | | | | | | |
|---|---|---|---|---|---|---|---|
| 079 | 141Y50-7 | Magazine end complete | | 1 | | | |
| C10 | 8082B1-6 | Caution label | | 1 | | | |
| 080 | 347C85-6 | End plate | | 1 | | | |
| 081 | 347C79-1 | Nail rail | | 1 | | | |
| 082 | 4130V3-3 | Magazine | | 1 | | | |
| 083 | 265911-8 | Hex. socket head bolt M4X8 | | 2 | | | |
| A01 | 251314-2 | Truss head screw M4X12 | | 1 | | | |
| A02 | 346317-0 | Hook | | 1 | | | |
| A03 | 422B86-0 | Nose adapter | | 2 | | | |