Model No.CL200FD Cordless Cleaner

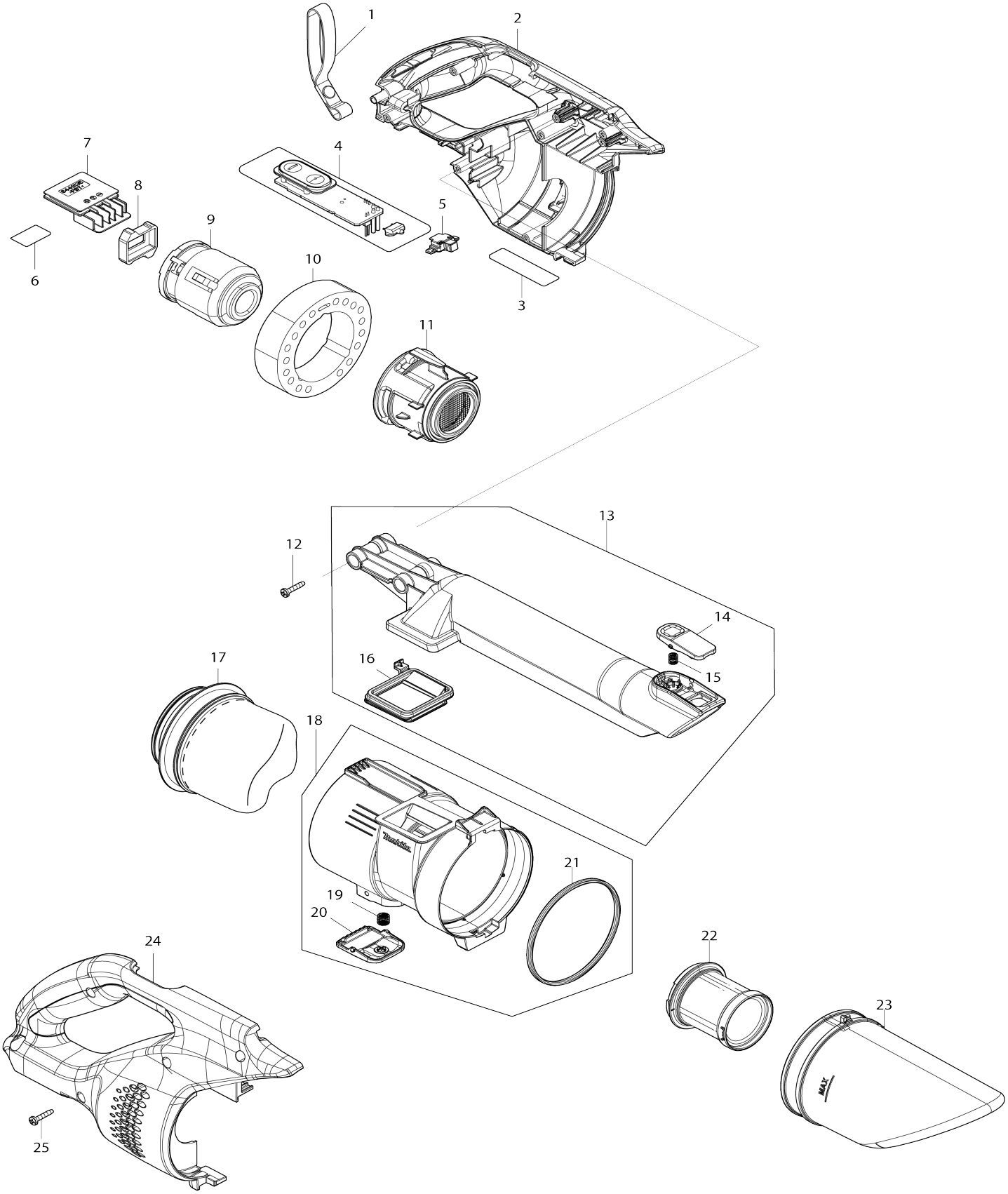

Model No.CL200FD Cordless Cleaner

Item No.	Parts No.	Description	Interchangeability	Q'ty	New/ Old	Note1	Note2
002	1831V1-4	HOUSING SET		1			
C10	422C98-9	Sponge sheet 11-28		1			
C20	422C99-7	Sponge sheet 16-75		2			
002		INC. 24					
003	8153A0-0	CL200FD NAME PLATE		1			
004	620S84-2	Controller complete		1			
005	141H09-2	LED case complete		1			
006	8153A1-8	CL200FD SERIAL NO. LABEL		1			
007	644813-5	Terminal		1			
008	422C95-5	Motor support		1			
009	629D67-9	Motor assembly		1			
010	422C97-1	Sponge sheet		1			
011	137399-1	MOTOR COVER ASSEMBLY		1			
C10	263039-6	Rubber pin 4		3			
012	266429-2	Binding head tapping screw 3X16		2			
013	137349-6	INLET ASSEMBLY		1	*		
013		INC. 14-16			*		
013-1	137349-6	INLET ASSEMBLY	O	1			
013-1		INC. 14-16					
014	4132F8-3	Button		1	*		
014-1	4132F8-3	Button	O	1			
015	232485-4	Compression spring 5		1			
016	422C96-3	Inlet seal		1			
017	1915P0-4	High performance filter set		1			
018	137347-0	FILTER CASE ASSEMBLY		1	*		
018		INC. 19-21			*		
018-1	137347-0	FILTER CASE ASSEMBLY	O	1			
018-1		INC. 19-21					
019	232460-0	Compression spring 7		1			
020	4133R5-9	Stopper		1			
021	422C27-2	Seal ring 76		1			
022	4133R3-3	Pre-filter		1			
023	4133R2-5	Dust box		1			
024	1831V1-4	HOUSING SET		1			
C10	422C98-9	Sponge sheet 11-28		1			
C20	422C99-7	Sponge sheet 16-75		2			
024		INC. 2					
025	266429-2	Binding head tapping screw 3X16		6			
A01	127825-8	Nozzle assembly		1	*		
C10	268208-4	Pin 3		4	*		
C20	451410-8	Roller		4	*		
C30	422963-4	Wiper		1	*		
A01-1	127825-8	Nozzle assembly	O	1	*		
C10	268208-4	Pin 3		4	*		
C20	451410-8	Roller		4	*		
C30	422963-4	Wiper		1	*		

A01-2	1918V6-2	NOZZLE ASSEMBLY SET	O	1			
C10	268208-4	Pin 3		4			
C20	451410-8	Roller		4			
C30	422963-4	Wiper		1			
A02	413770-6	Sash nozzle		1			
A03	459353-8	Pipe		1			
A04	459354-6	Nozzle holder		1			
F02	1918V6-2	NOZZLE ASSEMBLY SET		1			
F03	191D76-3	Straight pipe 340 set		1			
F04	191D79-7	Straight pipe 320 set		1			
F05	191X06-4	Nozzle assembly set		1	*		
F05-1	191X06-4	Nozzle assembly set	O	1			
F06	1910Y3-1	Telescopic pipe set		1			
F07	1915P0-4	High performance filter set		1			
F08	1915P2-0	Filter H set		1	*		
F08-1	1915P2-0	Filter H set	O	1			
F09	198868-7	Flexible hose set		1			
F10	198873-4	Shelf brush set		1			
F11	198878-4	Round brush set		1			
F12	198919-6	Long corner nozzle set		1			
F13	199038-1	Seat nozzle set		1			
F14	199439-3	Crevice nozzle 415 set		1			

Please state Parts No. when your order.

Print Date 11/02/2026