Model No.CL003G Cordless Cleaner

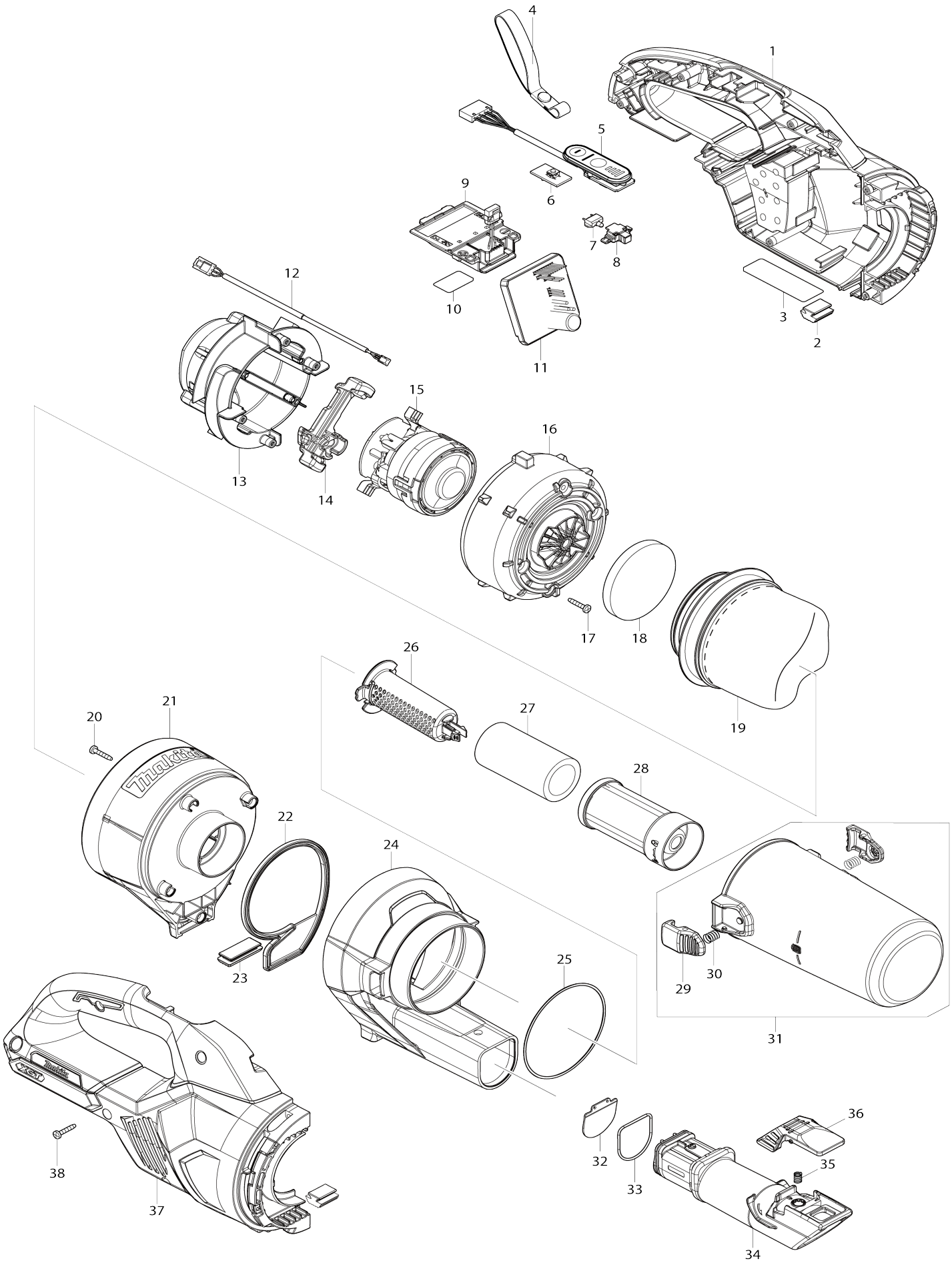

Model No.CL003G Cordless Cleaner

Item No.	Parts No.	Description	Interchangeability	Q'ty	New/ Old	Note1	Note2
001	183W55-9	Housing set		1			
C10	263005-3	Rubber pin 6		2			
C20	422714-5	Sponge sheet		2			
C30	8005T5-8	XGT logo label		1			
001		INC. 2,37					
001	183W52-5	Housing set		1			
C10	263005-3	Rubber pin 6		2			
C20	422714-5	Sponge sheet		2			
C30	8005T5-8	XGT logo label		1			
001		INC. 2,37					
002	422460-0	Rubber plate		2			
003	858F40-6	Name plate CL003G		1			
005	141B54-1	Indication circuit complete		1			
C10	8031J2-9	Switch label		1			
006	620E74-1	Switch unit		1			
007	620E82-2	LED circuit		1			
008	141H09-2	LED case complete		1			
009	632P65-6	Terminal unit		1			
010	858F47-2	Serial No. label CL003G		1			
011	620E90-3	Controller		1			
012	632S32-9	Lead unit		1			
013	141E55-7	Motor cover R complete		1			
C10	263002-9	Rubber pin 4		4			
014	422723-4	Motor cover seal		1			
015	629A46-9	Motor assembly		1			
016	413645-9	Motor cover F		1			
017	266429-2	Binding head tapping screw 3X16		4			
018	422909-0	Sponge sheet 62		1			
019	1910C7-9	High performance filter set		1			
020	266429-2	Binding head tapping screw 3X16		4			
021	413H37-0	Filter housing		1			
021	413H18-4	Filter housing		1			
022	422884-0	Seal		1			
023	422885-8	Rubber plate		1			
024	413H38-8	Front housing		1			
024	413H19-2	Front housing		1			
025	213884-9	O-ring 72		1			
026	413H21-5	Mesh pipe		1			
027	422908-2	Sponge filter		1			
028	413H29-9	Pre-filter		1			
029	459106-5	Stopper		2	*		
029-1	459106-5	Stopper	O	2			
030	232460-0	Compression spring 7		2			
031	136713-8	Dust box assembly		1			
031		INC. 29,30					
032	422886-6	Valve		1			

033	213837-8	O-ring 29		1			
034	413H39-6	Inlet		1			
034	413H25-7	Inlet		1			
035	232485-4	Compression spring 5		1			
036	413H20-7	Lever		1			
037	183W55-9	Housing set		1			
C10	263005-3	Rubber pin 6		2			
C20	422714-5	Sponge sheet		2			
C30	8005T5-8	XGT logo label		1			
037		INC. 1,2					
037	183W52-5	Housing set		1			
C10	263005-3	Rubber pin 6		2			
C20	422714-5	Sponge sheet		2			
C30	8005T5-8	XGT logo label		1			
037		INC. 1,2					
038	266429-2	Binding head tapping screw 3X16		7			
A01	127828-2	Nozzle assembly		1	*		
C10	451410-8	Roller		4	*		
C20	268208-4	Pin 3		4	*		
C30	424096-1	Wiper		1	*		
C31	422963-4	Wiper	O	1	*		
A01	127825-8	Nozzle assembly		1	*		
C10	451410-8	Roller		4	*		
C20	268208-4	Pin 3		4	*		
C30	424096-1	Wiper		1	*		
C31	422963-4	Wiper	O	1	*		
A01-1	127828-2	Nozzle assembly	O	1	*		
C10	451410-8	Roller		4	*		
C20	268208-4	Pin 3		4	*		
C31	422963-4	Wiper	O	1	*		
A01-1	127825-8	Nozzle assembly	O	1	*		
C10	451410-8	Roller		4	*		
C20	268208-4	Pin 3		4	*		
C31	422963-4	Wiper	O	1	*		
A01-2	1918V8-8	NOZZLE ASSEMBLY SET	O	1			
C10	451410-8	Roller		4			
C20	268208-4	Pin 3		4			
C31	422963-4	Wiper	O	1			
A01-2	1918V6-2	NOZZLE ASSEMBLY SET	O	1			
C10	451410-8	Roller		4			
C20	268208-4	Pin 3		4			
C31	422963-4	Wiper	O	1			
A02	413809-5	Sash nozzle		1			
A02	413770-6	Sash nozzle		1			
A03	459038-6	Nozzle holder		1			
A03	459354-6	Nozzle holder		1			
A04	458942-6	Pipe		1			
A04	459353-8	Pipe		1			
A10	***DC40RA	DC40RA FAST CHARGER		1			
A10		COMPO-PARTS					
A11	191B36-3	Battery BL4025 set		2			

A12	412393-7	Battery cover		2			
F06	1910D3-4	Cyclone unit set		1			
F07	1910D4-2	Cyclone unit set		1			
F08	1910D5-0	Cyclone unit set		1			
F12	191D76-3	Straight pipe 340 set		1			
F13	191D77-1	Straight pipe 340 set		1			
F14	191D78-9	Straight pipe 340 set		1			
F15	191D79-7	Straight pipe 320 set		1			
F16	191D80-2	Straight pipe 320 set		1			
F17	191D81-0	Straight pipe 320 set		1			
F18	191E30-3	Flexible hose with lock set		1			
F25	198538-8	Shelf brush set		1			
F26	198540-1	Shelf brush set		1			
F29	198545-1	Flexible hose set		1			
F30	198547-7	Flexible hose set		1			
F31	198553-2	Round brush set		1			
F32	198555-8	Round brush set		1			
F38	198868-7	Flexible hose set		1			
F39	198873-4	Shelf brush set		1			
F40	198878-4	Round brush set		1			
F41	1910C7-9	High performance filter set		1			
F42	1910C9-5	Filter H set		1			
F43	198919-6	Long corner nozzle set		1			
F44	198990-0	Long corner nozzle set		1			
F45	198992-6	Long corner nozzle set		1			
F46	199038-1	Seat nozzle set		1			
F47	199039-9	Seat nozzle set		1			
F48	199041-2	Seat nozzle set		1			
F52	199901-8	Tool bag set		1			
F88	191X06-4	Nozzle assembly set		1	*		
F88-1	191X06-4	Nozzle assembly set	O	1			
F92	1911L1-0	Cleaner stand set		1			
F93	1910Y3-1	Telescopic pipe set		1			
F94	1918V6-2	NOZZLE ASSEMBLY SET		1			
F95	1918V7-0	NOZZLE ASSEMBLY SET		1			
F96	1918V8-8	NOZZLE ASSEMBLY SET		1			