Model No.BN002G Cordless Framing Nailer

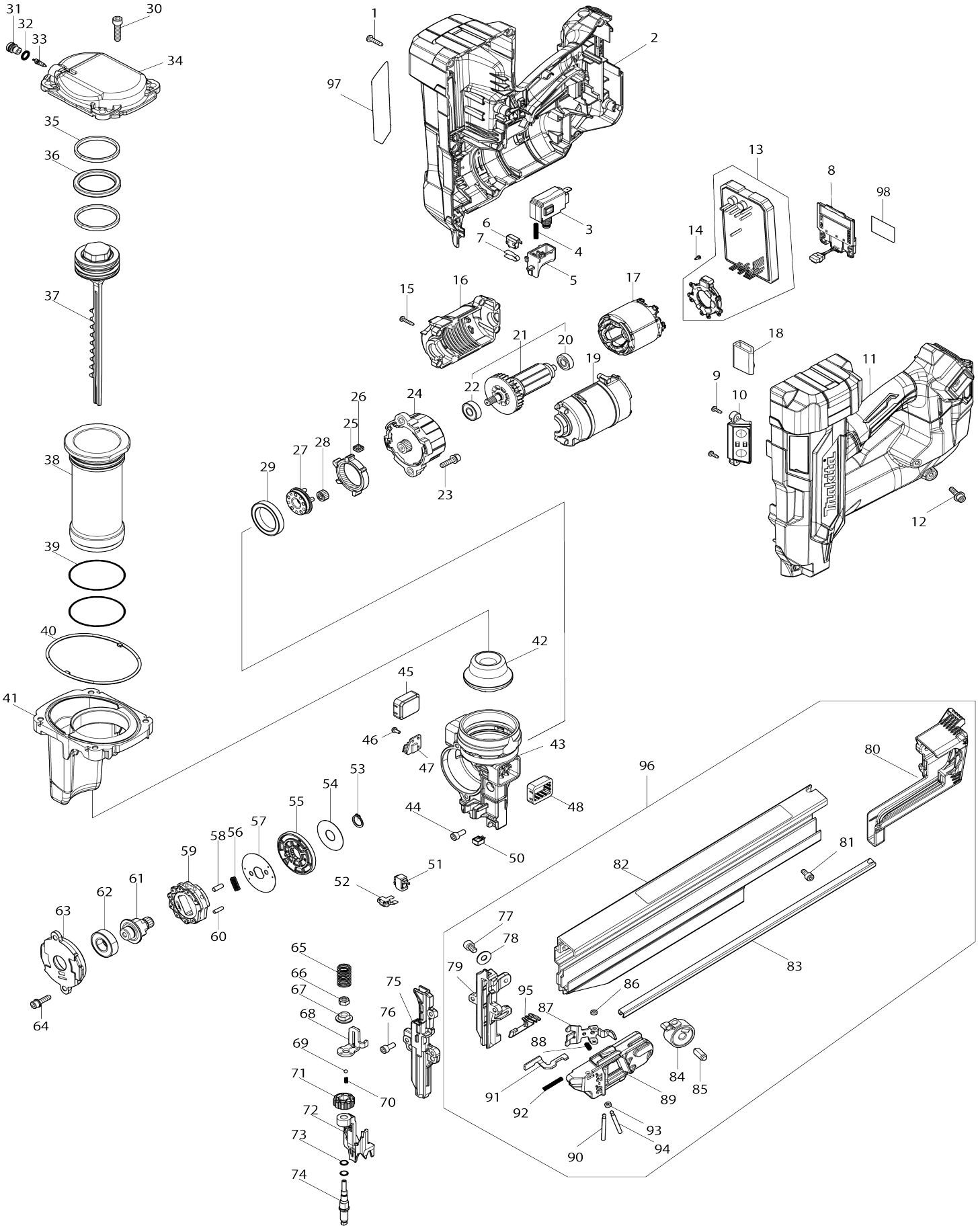

Model No.BN002G Cordless Framing Nailer

Item No.	Parts No.	Description	Interchangeability	Q'ty	New/ Old	Note1	Note2
001	265995-6	Binding head tapping screw 4X18		12			
002	1831P4-6	Housing set		1	*		
C10	263005-3	Rubber pin 6		2	*		
C20	263032-0	Rubber pin 4		2	*		
002		INC. 11			*		
002-1	1831P4-6	Housing set	O	1			
C10	263005-3	Rubber pin 6		2			
C20	263032-0	Rubber pin 4		2			
002-1		INC. 11					
003	650060-8	Switch C3JR-5BM-PAND-2		1			
004	232848-4	Compression spring 4		1			
005	413X17-2	Trigger		1			
006	632V61-0	Switch unit		1			
007	232964-2	Leaf spring		1			
008	632P65-6	Terminal unit		1			
009	266007-8	Binding head tapping screw 3X10		2			
010	620S71-1	SWITCH CIRCUIT COMPLETE		1			
011	1831P4-6	Housing set		1	*		
C10	263005-3	Rubber pin 6		2	*		
C20	263032-0	Rubber pin 4		2	*		
011		IN. 2			*		
011-1	1831P4-6	Housing set	O	1			
C10	263005-3	Rubber pin 6		2			
C20	263032-0	Rubber pin 4		2			
011-1		IN. 2					
012	265D66-3	Hex. socket head bolt M5X20 WG		1			
013	620R94-3	CONTROLLER		1			
014	652119-7	Pan head screw M2X6		6			
015	266130-9	Binding head tapping screw 3X16		5			
016	1831P9-6	Motor housing set		1			
016		INC. 19					
017	629D03-5	STATOR		1			
018	685722-9	Sponge		1			
019	1831P9-6	Motor housing set		1			
019		INC. 16					
020	210169-4	Ball bearing 607LLB		1			
021	519892-1	Rotor assembly		1	*		
021		INC. 20,22			*		
021-1	519946-4	ROTOR ASS'Y	O	1			
021-1		INC. 20,22					
022	210223-4	Ball bearing 608ZZ		1			
023	265853-6	Hex. socket head bolt M5X18		2			
024	122H96-0	GEAR ASSEMBLY		1			
025	227B41-5	Internal gear 44		1			
026	422B18-7	Gear cushion		4			

027	141U61-8	Carrier complete		1			
028	227B54-6	Spur gear 13		5			
029	211423-9	Ball bearing 6806DDW		1			
030	922342-1	Hex. socket head bolt M6X25		4			
031	327D23-0	Valve cap		1			
032	213007-9	O-ring 8		1			
033	243138-0	Valve core		1			
034	312E84-9	Top cap		1			
035	413X16-4	Slide ring		2			
036	213A70-8	X-ring 40		1	*		
036-1	213B05-5	X-RING 40	<	1			
037	141U66-8	Driver complete		1			
038	327D22-2	Cylinder		1			
039	213663-5	O-ring 55		2			
040	422B15-3	Seal ring		1			
041	141U65-0	Chamber complete		1			
042	422B14-5	Front cushion		1			
043	312E81-5	Nose		1			
044	251490-2	Hex. socket head bolt M5X14 WR		3			
045	422B16-1	Side cushion		1			
046	265173-8	Pan head screw M3X8		2			
047	620S90-7	SENSOR CIRCUIT		1	*		
047-1	620S90-7	SENSOR CIRCUIT	O	1			
048	422B16-1	Side cushion		1			
050	620R02-4	LED circuit		1			
051	137163-0	Switch assembly		1			
052	232843-4	Leaf spring		1			
053	961053-3	Retaining ring (EXT) S-13		1			
054	253595-4	Flat washer 14		1			
055	141U60-0	Holder complete		1			
056	232846-8	Compression spring 4		1			
057	347C07-6	Pin cover		1			
058	256A54-3	Pin 5		8			
059	327F05-4	LIFTER		1			
060	256A01-4	PIN 3.5		1			
061	327D05-2	Lifter shaft		1			
062	211236-8	Ball bearing 6002DDW		1			
063	312E82-3	Lifter cap		1			
064	265D66-3	Hex. socket head bolt M5X20 WG		2			
065	232847-6	Compression spring 12		1			
066	264027-6	Hex. lock nut M6-10		1			
067	327D17-5	Adjuster sleeve		1			
068	347C06-8	Contact arm		1			
069	216001-0	Steel ball 3.5		1			
070	232417-1	Compression spring 3		1			
071	413X07-5	Adjuster dial		1			
072	313673-3	CONTACT TOP		1			
073	213A98-6	O RING 5		2	*		
073-1	213005-3	O-ring 5	O	2			
074	327D20-6	Adjuster shaft		1			
075	313505-4	Driver guide		1			
076	265D55-8	Hex. socket head bolt M5X12		2			

077	265915-0	Hex. socket head bolt M6X10		1			
078	267426-1	Flat washer 7		1			
079	313506-2	Under driver guide		1			
080	413X22-9	Magazine cap		1			
081	922212-4	Hex. socket head bolt M5X12		1			
082	1411E0-3	MAGAZINE COMPLETE		1			
C10	8076U0-2	Caution label		1			
083	347C11-5	Nail rail		1			
084	141U43-0	Spiral spring complete		1			
085	256428-2	Shoulder pin 5-8		1			
086	262054-7	Urethane ring 3		1			
087	347C13-1	Pusher		1			
088	234084-8	Compression spring 3		1			
089	413X23-7	Pusher lever		1			
090	256A57-7	Pin 4		1			
091	347C12-3	Lock plate		1			
092	233339-8	Compression spring 3		1			
093	262054-7	Urethane ring 3		1			
094	256A57-7	Pin 4		1			
095	422B13-7	Pusher cushion		1			
096	122H95-2	MAGAZINE ASSEMBLY		1			
096		INC. 77-95					
097	8152N3-9	Name plate BN002G		1			
098	8152N5-5	Serial No. label BN002G		1			
A01	141X57-7	Hook assembly		1			
A02	265D55-8	Hex. socket head bolt M5X12		3			
A03	347C14-9	Hook		1			
A04	4133Y2-4	NOSE ADAPTER		1			
A05	783202-0	Hex. wrench 4		1			
A06	821943-1	Plastic case		1			
C10	162271-8	Latch		2			
A07	836532-9	Inner tray		1			
F02	1914P9-0	Extended capacity magazine set		1			
F03	1916P4-2	Nose adapter set		1			