Model No.9920 BELT SANDER 76MM

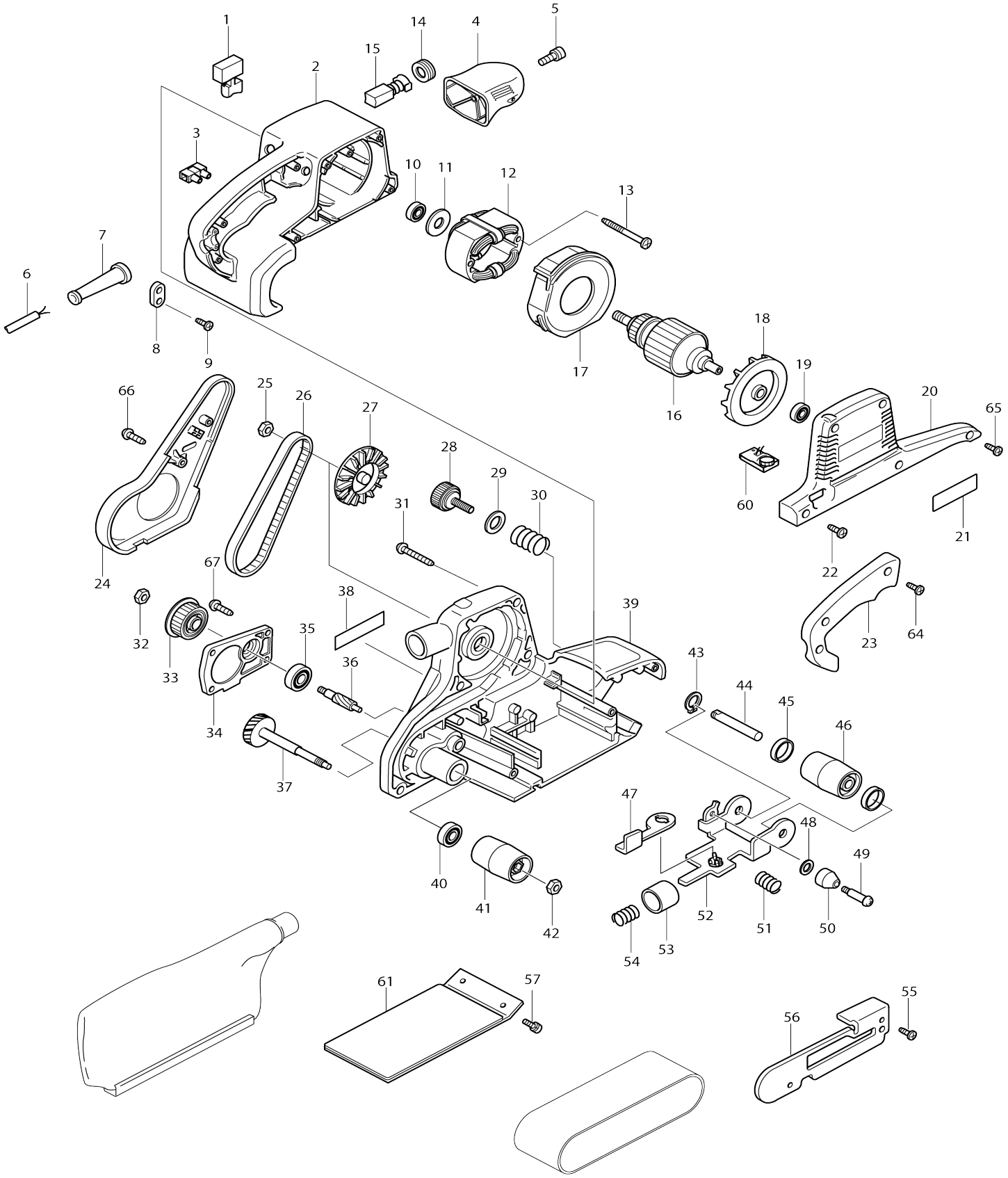

Model No.9920 BELT SANDER 76MM

Item No.	Parts No.	Description	Interchangeability	Q'ty	New/ Old	Note1	Note2
001	651284-9	SWITCH SGEL115CDY-6		1			
002	151743-8	MOTOR HOUSING COMPLETE		1			
C10	643708-9	BRUSH HOLDER 5-11		2			
003	654532-5	TERMINAL BLOCK 1P		1			
004	417049-7	FRONT GRIP		1			
005	266173-1	TAPPING SCREW 5X30		1			
006D_	665890-4	POWER SUPPLY CORD 1.0-2-4.0		1			
007B_	682540-6	CORD GUARD 9.3-90		1	*		
007B1	682505-8	CORD GUARD 10-90	O	1			
008A_	687052-4	STRAIN RELIEF		1			
009	265995-6	TAPPING SCREW 4X18		2			
010	211088-7	BALL BEARING 6000DDW		1			
011	681649-1	INSULATION WASHER		1			
012B_	523404-4	FIELD ASS'Y 230-240V		1			
C10	654020-2	RING TERMINAL		2			
C20	654502-4	CONNECTOR P-2		2	*		
C21	654501-6	CONNECTOR P-1.25	<	2	*		
013	266056-5	TAPPING SCREW 5X45		2			
014	643750-0	BRUSH HOLDER CAP 7-11		2	*		
014-1	643515-0	HOLDER CAP 7-11	O	2	*		
014-2	643750-0	BRUSH HOLDER CAP 7-11	O	2			
015	191963-2	CARBON BRUSH CB-303		1	*		
015-1	194996-6	CARBON BRUSH SET CB-303	O	1			
016B_	513339-7	ARMATURE ASS'Y 230-240V		1			
D10		INC. 10,11,18,19					
017	417050-2	BAFFLE PLATE		1			
018	240026-2	FAN 75		1			
019	210023-2	BALL BEARING 627DDW		1			
020	417048-9	MOTOR COVER		1			
021	819001-5	MAKITA LABEL		1			
022	265995-6	TAPPING SCREW 4X18		4			
023	417051-0	HANDLE COVER		1			
024	417052-8	BELT COVER		1			
025	252153-3	HEX. NUT M6-10		1			
026	225084-9	SYNCHRO BELT 6-330		1			
027	241663-5	FAN 76		1			
028	251815-0	SCREW M6X25		1			
029	253707-9	FLAT WASHER 16		1	*		
030	231225-7	COMPRESSION SPRING 16		1	*		
030-1	232573-7	COMPRESSION SPRING 16	S	1			
031	266050-7	TAPPING SCREW 4X30		5			
032	931402-8	HEX. NUT M8		1			
033	222156-1	PULLEY 9.5-46.0		1			
034	317273-1	GEAR COVER		1			
035	211092-6	BALL BEARING 629DDW		1	*		
035-1	210078-7	BALL BEARING 629DDW	O	1	*		
035-2	211092-6	BALL BEARING 629DDW	O	1			

036	226520-8	HELICAL GEAR 10		1			
037	151755-1	HELICAL GEAR 39 COMPLETE		1			
C10	226519-3	HELICAL GEAR 39		1			
038	852053-3	NAME PLATE 9920		1			
039	151747-0	FRAME COMPLETE		1			
C10	212043-2	NEEDLE BEARING 810		1			
C20	214116-7	PLANE BEARING 12		1	*		
C21	214101-0	PLANE BEARING 12	<	1			
C30	344828-9	PLATE		1			
040	211088-7	BALL BEARING 6000DDW		1			
041	162217-4	DRIVING ROLLER		1			
042	252154-1	HEX. NUT M8-13		1			
043	961052-5	RETAINING RING (EXT) S-12		1			
044	323931-9	TENSION ROLLER SHAFT		1			
045	253922-5	CUP WASHER 12		2			
046	151753-5	TENSION ROLLER COMPLETE		1			
C10	214116-7	PLANE BEARING 12		2			
C20	413012-8	SPONGE SHEET 30-47		1			
047	344823-9	LEVER		1			
048	267731-6	CUP WASHER 4		1			
049	265059-6	SHOULDER SCREW M4		1			
050	416417-1	ROLLER		1			
051	233249-9	COMPRESSION SPRING 7		1			
052	151744-6	TENSION ROLLER ARM COMPLETE		1			
053	267746-3	CUP WASHER 17		1			
054	233250-4	COMPRESSION SPRING 12		1			
055	266034-5	TAPPING SCREW CT 4X16		2			
056	344822-1	SAFETY COVER		1			
057	911116-5	PAN HEAD SCREW M4X12		2			
060A_	631380-9	CONTROLLER		1			
061A1	193198-1	CARBON PLATE		1			
064	265995-6	TAPPING SCREW 4X18		3			
065	266034-5	TAPPING SCREW CT 4X16		1			
066	266034-5	TAPPING SCREW CT 4X16		1			
067	266034-5	TAPPING SCREW CT 4X16		4			
A01	122591-2	DUST BAG ASS'Y		1			
C10	410602-8	FASTENER		1			
A02	794239-2	ABRASIVE BELT 76X610 WA80		1	*		
A02-1	D-67169	ABRASIVEBELT WOOD 76X610	O	1			
E01-1	193200-0	CORK RUBBER PLATE SET		1			
E02	344848-3	STRAP WASHER		1			
E03	645105-5	NOISE SUPPRESSOR		1			
F17-1	193055-3	BELT SANDER STAND	<	1			
A03	821551-8	CONNECTOR PLASTIC CASE (TYPE3)		1			
C10	453974-8	LATCH		4			
A04	803F05-3	9920J INDICATION LABEL		1			
A05	803F06-1	9920J PLASTIC CASE LABEL		2			
A06	837877-8	INNER TRAY		1			