Model No.9910 BELT SANDER 76MM

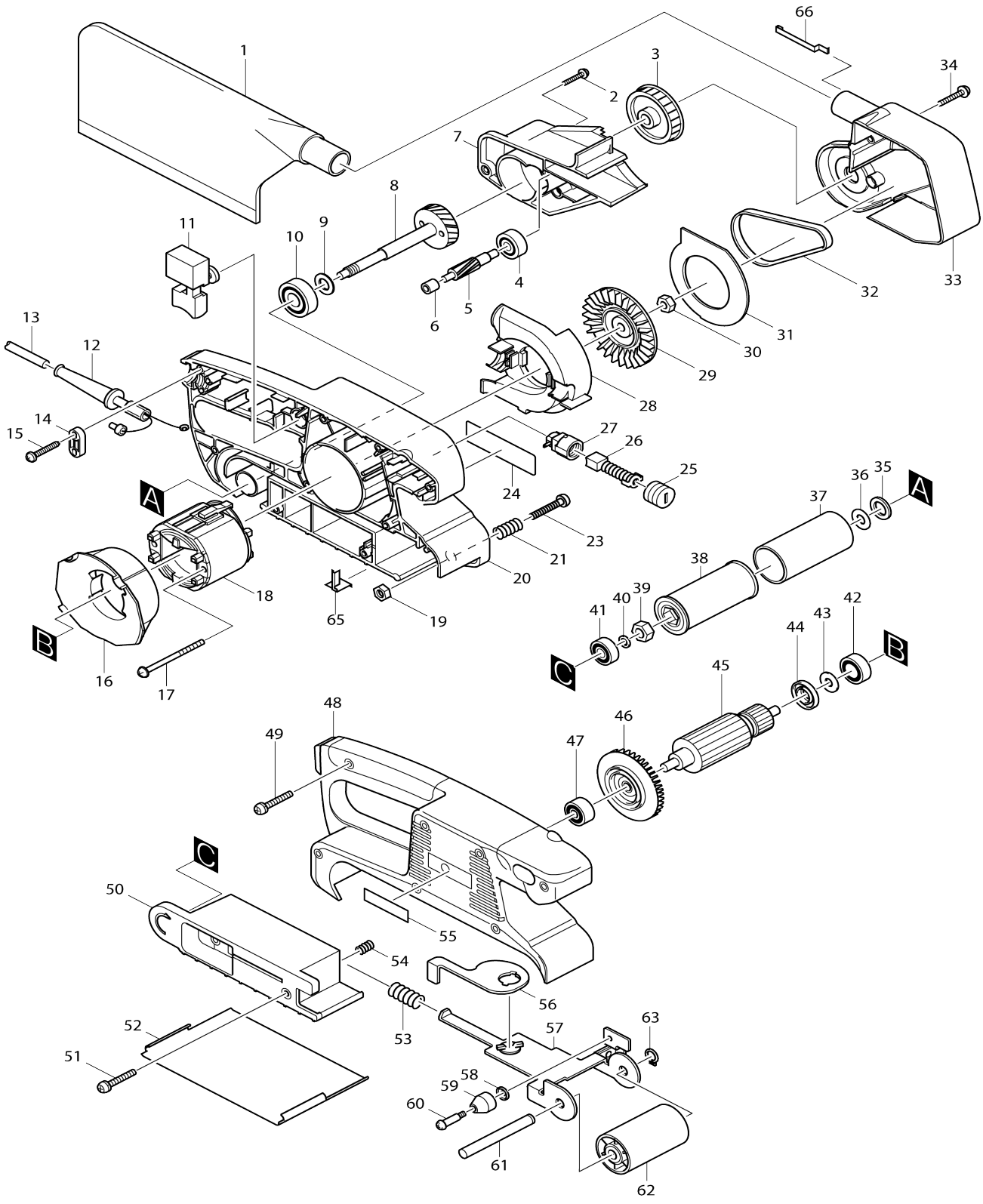

Model No.9910 BELT SANDER 76MM

Item No.	Parts No.	Description	Interchangeability	Q'ty	New/ Old	Note1	Note2
001	122548-3	Dust bag assembly		1			
C10	410602-8	Fastener		1			
002A_	266119-7	Binding head tapping screw 4X25		4	*		
002A1	265999-8	Binding head tapping screw 4X25	O	4			
002A1C	265999-8	Binding head tapping screw 4X25		4			
003	222144-8	Pulley 8.5-45.1		1			
004	210005-4	Ball bearing 608DDW		1			
005	226494-3	Helical gear 6		1			
006	212009-2	Needle bearing 509		1			
007	416420-2	Bracket		1			
008	153252-3	Helical gear 31 complete		1			
009	253758-2	Flat washer 10		1			
010A_	211061-7	Ball bearing 6000LLB		1			
011	651285-7	Switch SGEL206C-4		1	*		
011-1	651285-7	Switch SGEL206C-4	O	1			
012A_	682502-4	Cord guard 8-85		1			
013D1C	665394-6	Power supply cord 1.0-2-2.5		1			
013E_	665394-6	Power supply cord 1.0-2-2.5		1			
014A1C	687052-4	Strain relief		1			
014B_	687052-4	Strain relief		1			
015A_	266121-0	Binding head tapping screw 4X18		2	*		
015A1	265995-6	Binding head tapping screw 4X18	O	2			
015A1C	265995-6	Binding head tapping screw 4X18		2			
016	416418-9	Baffle plate		1			
017A_	266114-7	Binding head tapping screw 4X60		2	*		
017A1	266052-3	Binding head tapping screw 4X60	O	2			
017A1C	266052-3	Binding head tapping screw 4X60		2			
018B_	633393-6	Field 220-240V		1			
019	931202-6	Hex. nut M5		1			
020	150958-4	Housing L complete		1			
020		INC. 6,19					
021	233219-8	Compression spring 6		1			
023	911252-7	Pan head screw M5X30		1			
024	859229-3	Name plate 9910		1	*		
024-1	859594-0	Name plate 9910	<	1			
025	643550-8	Holder cap 5-8		2			
026A_	191940-4	Carbon brush set CB-411		1	*		
026A1	195010-1	Carbon brush set CB-411	O	1			
027	643922-7	Brush holder 6-9		2			
028	416416-3	Scroll plate		1			

029	241660-1	Fan 68		1			
030	252153-3	Hex. nut M6-10		1			
031	344584-1	Plate		1			
032	225079-2	Synchro belt 6-300		1			
033	416415-5	Belt cover		1			
034A_	266119-7	Binding head tapping screw 4X25		4	*		
034A1	265999-8	Binding head tapping screw 4X25	O	4			
034A1C	265999-8	Binding head tapping screw 4X25		4			
035	267177-6	Flat washer 12		1			
036	253865-1	Flat washer 8		1			
037	422032-1	Rubber sleeve 29		1			
038	316971-4	Driving roller		1			
039	252154-1	Hex. nut M8-13		1			
040	253077-6	Flat washer 6		1			
041	210022-4	Ball bearing 626DDW		1			
042	210023-2	Ball bearing 627DDW		1			
043	253823-7	Flat washer 7		1			
044	681648-3	Insulation washer		1	*		
044-1	681658-0	Insulation washer	X	1			
044-1C	681658-0	Insulation washer		1			
045B_	517243-2	Armature assembly 220-240V		1			
045B_		INC. 42-44,46,47					
046	240008-4	Fan 60		1			
047	211021-9	Ball bearing 607LLB		1			
048	182981-1	Housing R set		1			
048		INC. 55					
049A_	266119-7	Binding head tapping screw 4X25		7	*		
049A1	265999-8	Binding head tapping screw 4X25	O	7			
049A1C	265999-8	Binding head tapping screw 4X25		7			
050	416419-7	Shoe		1			
051A_	266119-7	Binding head tapping screw 4X25		2	*		
051A1	265999-8	Binding head tapping screw 4X25	O	2			
051A1C	265999-8	Binding head tapping screw 4X25		2			
052	344586-7	Steel plate		1	*		
052-1	345503-0	Steel plate	O	1	*		
052-2	344586-7	Steel plate	O	1			
052-2C	344586-7	Steel plate		1			
053	233221-1	Compression spring 12		1			
054-1	231038-6	Compression spring 6		1			
055	819063-3	Makita logo label		1			
056	344585-9	Lever		1			
057	150837-6	Tension roller arm complete		1			
058	267731-6	Cup washer 4		1			
059	416417-1	Roller		1			

060	265059-6	Shoulder screw M4X21		1			
061	323776-5	Tension roller shaft		1			
062	152585-3	Tension roller complete		1			
063	961004-6	Retaining ring (EXT) S-8		1			
065	344703-9	Earth support		1			
066	344701-3	Earth plate		1			
067	632800-6	Lead unit		2			
A01	794551-0	Abrasive belt 76X457 (10 pcs)		1	*		
A01B	193957-3	Abrasive belt set		1	*		
A01-1	D-59209	ABRASIVE BELT 76X457 #80	X	1			
A01-1B	D-59184	ABRASIVE BELT 76X457 #40	S	1			
A02B	824733-1	Plastic case		1	*		
A02C	821551-8	Connector plastic case (type 3)		1			
C10	453974-8	Latch		4			
A02-1B	824982-0	Plastic case	S	1			
C10	162271-8	Latch		2			
C20	450990-1	Handle		1			
A03B	824732-3	Inner tray		1	*		
A03C	837658-0	Inner tray		1			
A03-1B	837721-9	Inner tray	S	1			
A04B	794551-0	Abrasive belt 76X457 (10 pcs)		1	*		
A04C	802J15-1	Indication label 9910J		1			
A04-1B	D-59209	ABRASIVE BELT 76X457 #80	X	1			
A05C	802J16-9	Plastic case label 9910J		2			
A06B	D-59209	ABRASIVE BELT 76X457 #80	S	1			
A07B	D-59221	ABRASIVE BELT 76X457 #120	S	1			
E02B_	645200-1	Noise suppressor		1	*		
E02B1	645146-1	Noise suppressor	O	1			
E02B1C	645146-1	Noise suppressor		1			
E03	652259-1	Clamp washer		4	*		
F03	192694-6	Clamp complete set		0			

Please state Parts No. when your order.

Print Date 12/22/2025