Model No.9237CB Polisher

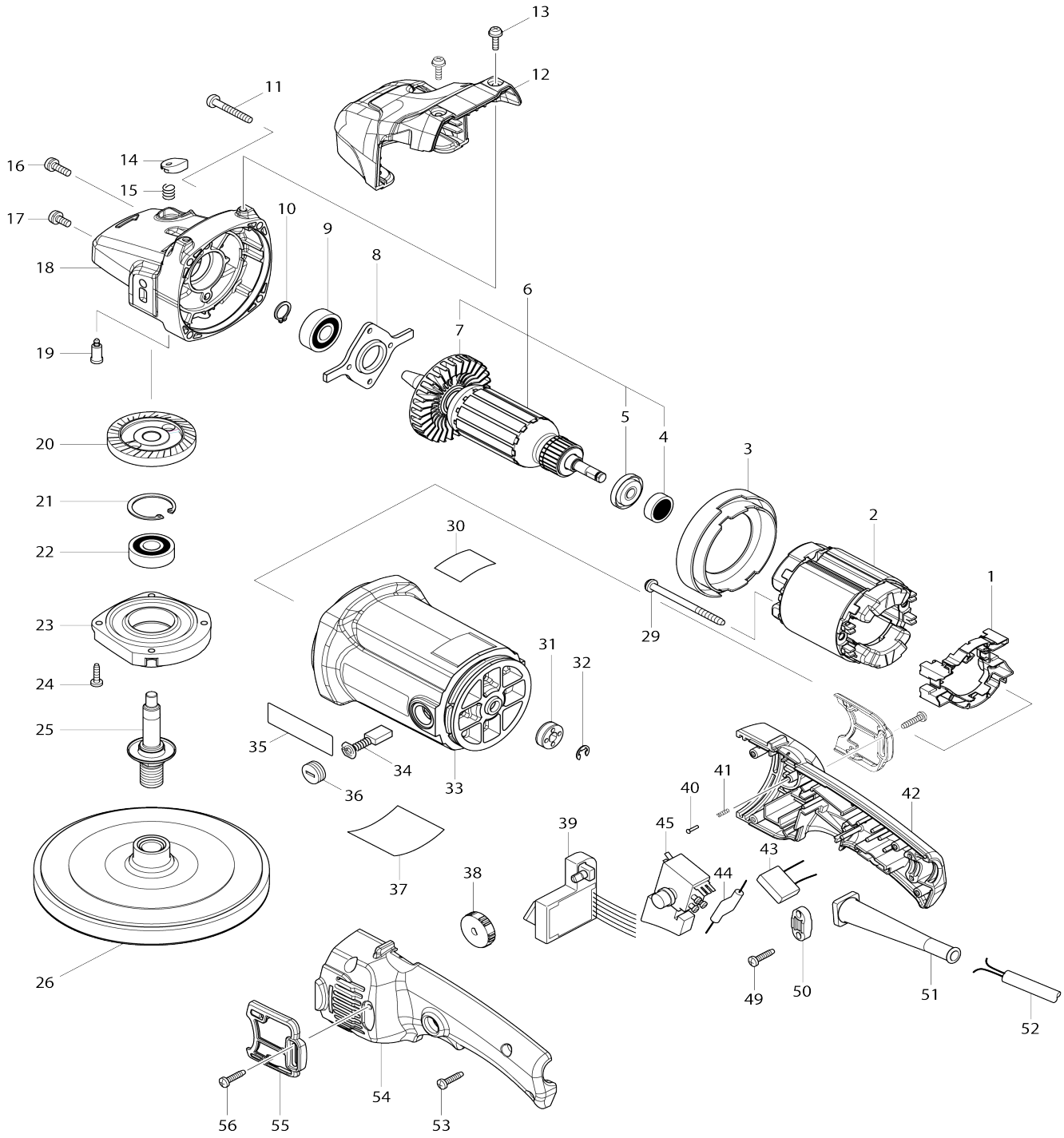

Model No.9237CB Polisher

Item No.	Parts No.	Description	Interchangeability	Q'ty	New/ Old	Note1	Note2
001	539168-0	Support assembly		1			
C10	654020-2	Ring terminal 36L		1			
C20	654501-6	Non-insulated splice P-1.25		1			
002	634293-3	Field 220/240V		1			
003	416253-5	Baffle plate		1			
004	211031-6	Ball bearing 608LLB		1			
005	681644-1	Insulation washer		1			
006	516308-7	Armature assembly 220-240V		1			
006		INC. 4,5,7					
007	240002-6	Fan 70		1			
008	285687-1	Bearing retainer 48		1			
009	211106-1	Ball bearing 6201LLB		1			
010	961052-5	Retaining ring (EXT) S-12		1			
011	266012-5	Binding head tapping screw 5X35		4			
012	455291-2	Head cover		1			
013	911118-1	Pan head screw M4X12 WR		2			
014	415491-6	Pin cap		1			
015	233072-2	Compression spring 8		1			
016	911221-8	Pan head screw M5X16 W		1			
017	911211-1	Pan head screw M5X12 W		1			
018	142747-1	Gear housing complete		1			
019	256504-2	Shoulder pin 9		1			
020	227512-0	Spiral bevel gear 52		1			
021	962151-6	Retaining ring (INT) R-32		1			
022	211106-1	Ball bearing 6201LLB		1			
023	316896-2	Bearing box		1			
024	266034-5	Binding head tapping screw 4X16		4			
025	152551-0	Spindle complete		1			
C10	344347-5	Labyrinth ring		1			
026	743053-3	Pad 165		1			
029	266038-7	Binding head tapping screw 5X70		2			
030	804M47-2	Operation label		1			
031	688110-9	Magnet sleeve		1			
032	961012-7	Stop ring (EXT) E-6		1			
033	187958-1	Motor housing set		1			
C10	643708-9	Brush holder 5-11		2			
033		INC. 35					
034	191963-2	Carbon brush set CB-303		1	*		
034-1	194996-6	Carbon brush set CB-303	O	1			
035	819285-5	Makita logo label		2			
036	643750-0	Holder cap 7-11		2	*		
036-1	643515-0	Holder cap 7-11	O	2	*		
036-2	643750-0	Holder cap 7-11	O	2			
037	815Y34-8	Name plate 9237CB		1			
038	271417-6	Dial 28		1			

039	631227-7	Controller		1			
040	255058-6	Rivet 2		1			
041	233002-3	Compression spring 3		1			
042	187917-5	Handle set		1			
042		INC. 54					
043	645200-1	Noise suppressor		1			
044	646077-7	Choke coil		1			
045	651282-3	Switch 2022.1004		1			
049	265995-6	Binding head tapping screw 4X18		2			
050	687052-4	Strain relief		1			
051	682573-1	Cord guard 10		1			
052	665890-4	Power supply cord 1.0-2-4.0		1			
053	265995-6	Binding head tapping screw 4X18		4			
054	187917-5	Handle set		1			
054		INC. 42					
055	455288-1	Dust cover		2			
056	265995-6	Binding head tapping screw 4X18		2			
A01	266171-5	Hex. socket head bolt M8X25		2			
A02	783204-6	Hex. wrench 6		1			
A03	262542-4	Sleeve 18		1			
A04	455293-8	Loop handle		1			
A05	192629-7	Wool pad 180 set		1			
F12	191D53-5	Wool pad 180 set		1			
F13	1916B8-6	Pad 165 set		1			