Model No.4351FCT JIG SAW

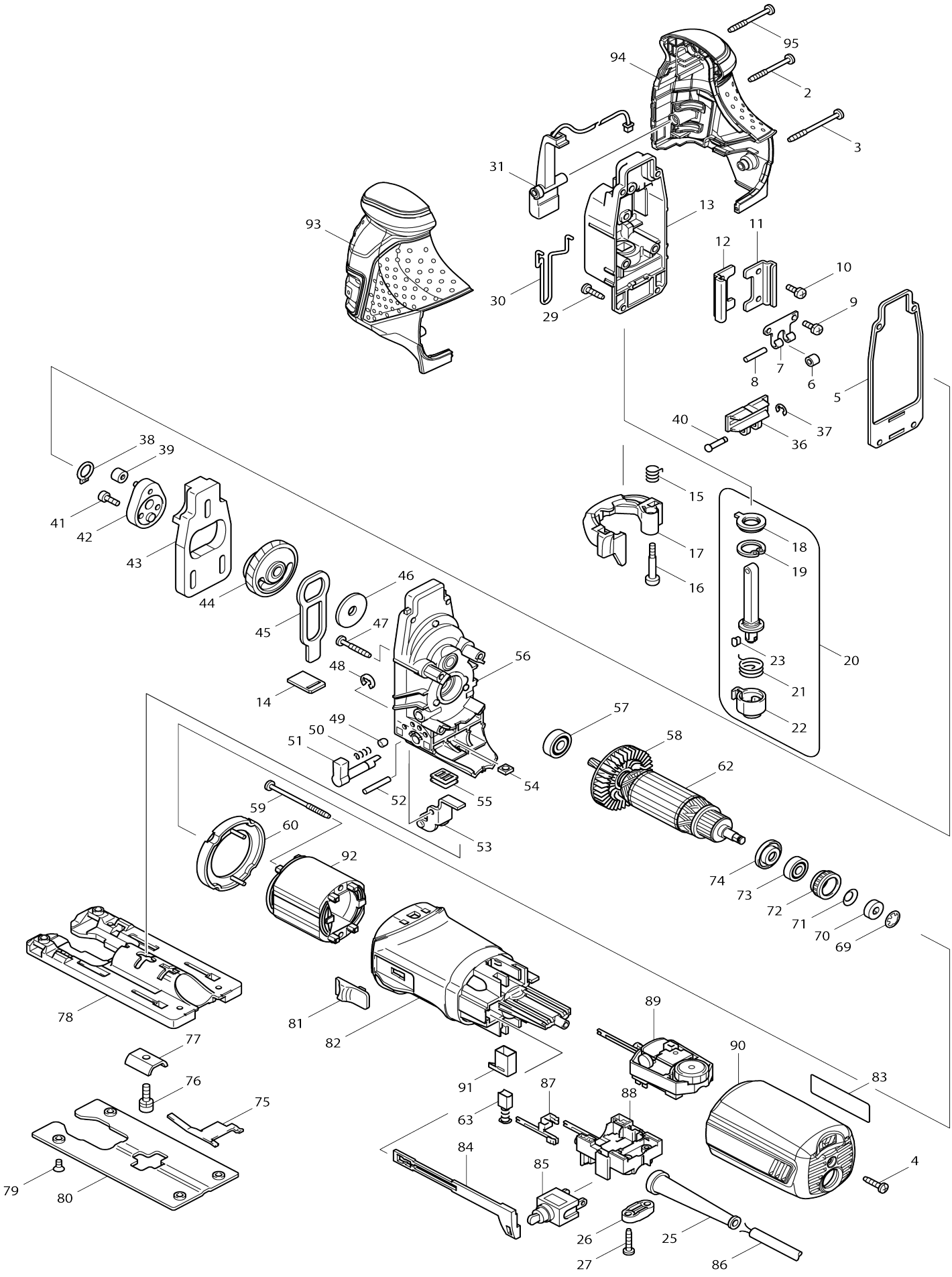

Model No.4351FCT JIG SAW

Item No.	Parts No.	Description	Interchangeability	Q'ty	New/ Old	Note1	Note2
002	266048-4	Binding head tapping screw 4X40		1			
003	266091-3	Binding head tapping screw 4X50		1	*		
003E	266091-3	Binding head tapping screw 4X50		1			
003-1	266467-4	Binding head tapping screw 4X50	O	1			
004	265995-6	Binding head tapping screw 4X18		1			
005	442138-9	Packing		1			
006	214031-5	Plane bearing 4		1			
007	232207-2	Leaf spring		1			
008	256117-9	Pin 4		1			
009	911111-5	Pan head screw M4X10 W		2			
010	911111-5	Pan head screw M4X10 W		2			
011	345240-6	Linear guide		1			
012	345240-6	Linear guide		1			
013	153338-3	Gear housing cover complete		1			
C10	253313-0	Thin washer 14		1			
C20	257250-0	Ring 20		1			
C30	421815-6	Dust seal 8		1			
014	417839-8	Seal plate		1			
015	231659-4	Torsion spring 6		1			
016	265026-1	Pan head shoulder screw M4		1			
017	419820-5	Tool opener		1			
018	421817-2	Dust cover		1			
019	962068-3	Retaining ring (INT) round R-18		1			
020	135060-4	Rod assembly		1			
C10	165326-8	Rod		1			
020		INC. 18,19,21-23					
021	231660-9	Torsion spring 15		1			
022	310136-0	Blade holder		1			
023	310135-2	Push pin		1			
025	682559-5	Cord guard 8		1			
026	687052-4	Strain relief		1	*		
026-1	687124-5	Strain relief	O	1			
026-1	687124-5	Strain relief		1			
027	265995-6	Binding head tapping screw 4X18		2			
029	266034-5	Binding head tapping screw 4X16		4			
030	324233-6	Safety wire		1			
031	631470-8	LED circuit		1			
036	310134-4	Slider		1			
037	961017-7	Stop ring (EXT) E-3		1			
038	961004-6	Retaining ring (EXT) S-8		1			
039	212014-9	Needle bearing 407		1	*		
039-1	212092-9	Needle bearing 407	O	1			

039-1F	212092-9	Needle bearing 407		1			
040	268090-1	Flat fillister HD. pin 4		1			
041	265353-6	Hex. socket head bolt M4X12		2	*		
041	265353-6	Hex. socket head bolt M4X12		2			
041-1	265D42-7	Hex. socket head bolt M4X12	O	2			
042	153336-7	Crank complete		1			
043	313108-4	Balance plate		1			
044	153335-9	Gear complete		1			
C10	212043-2	Needle bearing 810		2			
045	345235-9	Push plate		1			
046	253877-4	Flat washer 8		1			
047	266050-7	Binding head tapping screw 4X30		4			
048	961018-5	Stop ring (EXT) E-5		1			
049	286032-3	Cap 5		1			
050	233139-6	Compression spring 3		1			
051	272244-4	Lever 17		1	*		
051-1	272280-0	Lever 17	<	1			
051-1F	272280-0	Lever 17		1			
052	268063-4	Pin 4		1			
053	153334-1	Retainer complete		1			
054	252171-1	Square nut M5-8		1			
055	421816-4	Dust seal		1			
056	153337-5	Gear housing complete		1			
057	210005-4	Ball bearing 608DDW		1			
058	241881-5	Fan 52		1			
059	266052-3	Binding head tapping screw 4X60		2			
060	417838-0	Baffle plate		1			
062	517398-3	Armature assembly 220-240V		1			
062		INC. 57,58,73,74					
063	191962-4	Carbon brush set		1	*		
063-1	195015-1	Carbon brush set	O	1			
069	259039-2	Self lock 6		1			
070	688117-5	Magnet sleeve		1			
071	267756-0	Wave washer 6		1			
072	421494-0	Labyrinth rubber ring 19		1			
073	211021-9	Ball bearing 607LLB		1			
074	681636-0	Insulation washer		1			
075	232208-0	Leaf spring		1			
076	922226-3	Hex. socket head bolt M5X18 W		1			
077	345237-5	Clamp plate		1			
078	317565-8	Base		1			
079	912107-9	Countersunk head screw M4X8		4			
080	345238-3	Base plate		1			
081	417840-3	Switch lever		1	*		
081-1	4132A9-6	Switch lever	<	1			
082	419893-8	Motor housing		1	*		
082F	413815-0	Motor housing		1	*		
082-1	4132A8-8	Motor housing	<	1			
082-1	4132S9-2	Motor housing	<	1			

F							
083	863690-8	Name plate 4351FCT		1			
084	417841-1	Switch rod		1			
085	651428-1	Switch STL115ADF-CD		1	*		
085-1	651069-3	Switch ST115A-TB-F2	O	1			
085-1F	651069-3	Switch ST115A-TB-F2		1			
086	665394-6	Power supply cord 1.0-2-2.5		1			
087	654223-8	Terminal F		2			
088	638108-6	Switch block unit		1			
089	631769-1	Controller		1			
090	419896-2	Rear cover		1			
090F	413816-8	Rear cover		1			
091	643975-6	Brush holder		2			
092	633518-2	Field 220V		1			
093	188290-6	Head cover set		1			
093		INC. 94					
093F	183X05-0	Head cover set		1			
093F		INC. 94					
094	188290-6	Head cover set		1			
094		INC. 93					
094F	183X05-0	Head cover set		1			
094F		INC. 93					
095	266048-4	Binding head tapping screw 4X40		1			
A01	415524-7	Kerf board		1			
A02	417852-6	Cover plate		1			
A03	792522-1	Jig saw blade B-22 (5 pcs)		1	*		
A03-1	A-85737	JIGSAW BLADE NO.B22		1			
A04	792538-6	Jig saw blade B-10 (5 pcs)		1	*		
A04-1	A-85628	JIGSAW BLADE NO.B10		1			
A05	A-02294	JIG SAW BLADE BR-13		1	*		
A05-1	A-85793	JIGSAW BLADE NO.BR13		1			
A06	783202-0	Hex. wrench 4		1			
A07A	824809-4	Plastic case		1			
A07B	824810-9	Connector plastic case		1			
A07	821549-5	Connector plastic case (type 1)		1			
C10	453974-8	Latch		4			
A08	417853-4	Dust nozzle		1			
A09	837803-7	Inner tray		1			
A10C	800M86-0	Indication label 4351FCTJ		1			
A10F	8063W8-9	Indication label 4351FCTJB		1			
A11C	800M87-8	Plastic case label 4351FCTJ		2			
A11F	8063W9-7	Plastic case label 4351FCTJB		2			
F01	192516-0	Guide rail set		1			
F02	192557-6	Kerf board set		1			
F04	193516-3	Guide rule set		1			
C10	165217-3	Guide rule		1			
C20	271601-3	Knob 20		1			
C30	323802-0	Guide pin		1			
C40	922207-7	Hex. socket head bolt M5X10		1			
F05-1	193517-1	Guide rail adapter set	O	1			

C11	265785-7	Thumb screw M5X10	<	1			
C20	347393-7	Rule bar		1			
C30	417894-0	Guide rail adapter		1			
F06	194416-0	Sheet 10000 set		1			
F07	194417-8	Rubber sheet 10000 set		1			
F08	194418-6	Position sheet 1400 set		1			
F10	194367-7	Guide rail 3000 set		1			
C10	413102-7	Seat 3000		2			
C20	423360-7	Position sheet 3000		1			
C30	423362-3	Rubber sheet 3000		2			
C40	819212-2	Makita logo label		1			
F11	194368-5	Guide rail 1400 set		1			
C10	413101-9	Seat 1400		2			
C20	423359-2	Position sheet 1400		1			
C30	423361-5	Rubber sheet 1400		2			
C40	819212-2	Makita logo label		1			
F12	194925-9	Guide rail 1900 set		1			
C10	423386-9	Position sheet 1900		1			
C20	423390-8	Rubber sheet 1900		2			
C30	451330-6	Sheet 1900		2			
C40	819212-2	Makita logo label		1			
F13	194910-2	Position sheet 1900 set		1			
F15-2	197252-3	Guide rail adapter set	O	1	*		
F15-3	197252-3	Guide rail adapter set	O	1			
F16	199140-0	Guide rail 1000 set		1			
F17	199141-8	Guide rail 1500 set		1			