Model No.4112HS ANGLE CUTTER 305MM

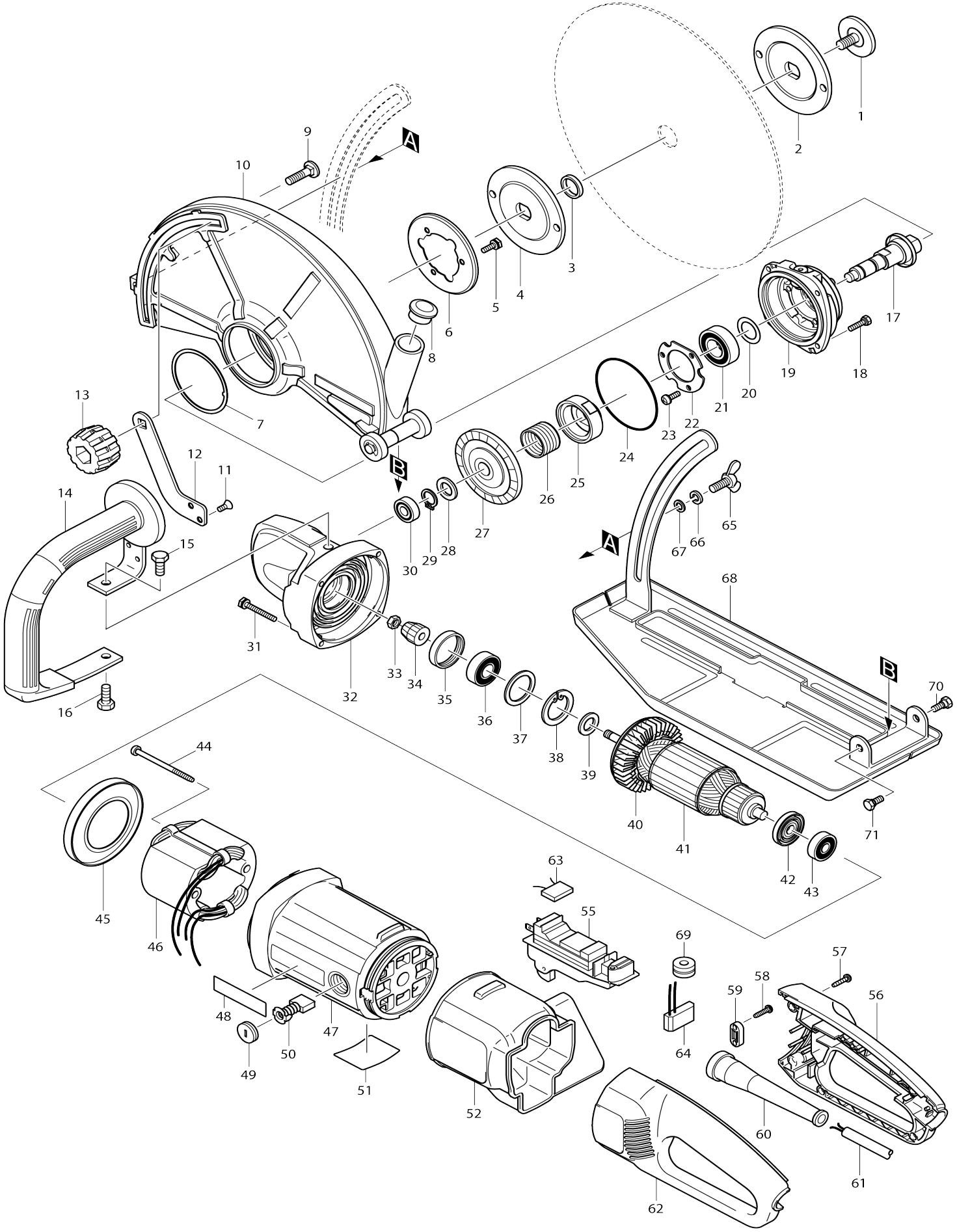

Model No.4112HS ANGLE CUTTER 305MM

Item No.	Parts No.	Description	Interchangeability	Q'ty	New/ Old	Note1	Note2
001	265265-3	HEX. BOLT M10X25		1			
002	224184-2	INNER FLANGE 100		1			
003	257054-0	RING 20		1			
004	224184-2	INNER FLANGE 100		1			
005	925221-2	+ HEX. BOLT M5X16		3	*		
005-1	925216-5	+ HEX. BOLT M5X14	<	3			
006	345269-2	PRESSURE PLATE		1			
007	341853-1	PLATE B		1			
008	286268-4	CAP 31		1	*		
008-1	286289-6	CAP 32	<	1			
009	265845-5	CAP SQUARE NECK BOLT M8X30		1			
010	125185-2	WHEEL COVER ASS'Y		1			
C10	257091-4	RING 12		2			
C20	961015-1	STOP RING E-9		2			
C30	817574-2	CAUTION LABEL		1			
011	912202-5	COUNTERSUNK HEAD SCREW M5 X8		2			
012	345291-9	LOCK PLATE		1			
013	252648-6	THUMB NUT M8		1			
014	273655-6	GRIP		1			
015	921432-7	HEX. BOLT M8X20		1			
016	921432-7	HEX. BOLT M8X20		1			
017	153541-6	SPINDLE COMPLETE		1			
018	265502-5	+ HEX. BOLT M5X20		4			
019	153539-3	BEARING BOX COMPLETE		1			
020	267041-1	FLAT WASHER 20		1			
021	211326-7	BALL BEARING 6004DDW		1	*		
021-1	211326-7	BALL BEARING 6004DDW	O	1			
022	285708-9	BEARING RETAINER 50		1			
023	911221-8	PAN HEAD SCREW M5X16		3			
024	213757-6	O RING 80		1			
025	331644-8	LOCK SLEEVE		1			
026	233922-1	LOCK SPRING 24		1			
027	227438-6	SPIRAL BEVEL GEAR 48		1			
028	267251-0	FLAT WASHER 15		1			
029	961055-9	RETAINING RING S-15		1			
030	211061-7	BALL BEARING 6000LLB		1			
031	925261-0	+ HEX. BOLT M5X40		4			
032	153542-4	GEAR HOUSING COMPLETE		1			
033	252178-7	HEX. NUT M8-12		1			
034	227440-9	SPIRAL BEVEL GEAR 9		1			
035	262554-7	RUBBER RING 36		1			
036	211228-7	BALL BEARING 6202DDW		1			
037	267250-2	FLAT WASHER 30		1			
038	962157-4	RETAINING RING R-40		1			
039	267251-0	FLAT WASHER 15		1			
040	240060-2	FAN 80		1			
041	516888-3	ARMATURE ASS'Y 220-240V		1			

D10		INC. 40,42,43					
042	681630-2	INSULATION WASHER		1			
043	211087-9	BALL BEARING 6200DDW		1			
044	266059-9	TAPPING SCREW 5X75		2			
045	416131-9	BAFFLE PLATE		1			
046	626134-7	FIELD 220-240V		1			
047	183564-0	MOTOR HOUSING		1			
C10	643707-1	BRUSH HOLDER		2			
D10		INC. 48					
048	819064-1	MAKITA MARK		2			
049	643710-2	BRUSH HOLDER CAP		2			
050	191957-7	A.C. CARBON BRUSH CB-204		1	*		
050-1	194992-4	CARBON BRUSH SET CB-204	O	1			
051	850449-2	NAME PLATE 4112HS		1			
052	421831-8	DUST COVER		1			
055	651147-9	SWITCH 1362.0102		1	*		
055-1	651178-8	SWITCH 1362.0112	O	1	*		
055-2	651179-6	SWITCH 1362.0113	X	1			
056	183615-9	HANDLE SET		1			
C10	421833-4	SPONGE SHEET		1			
D10		INC. 62					
057	266045-0	TAPPING SCREW 4X20		5			
058	265995-6	TAPPING SCREW 4X18		2			
059	687053-2	STRAIN RELIEF		1			
060	682560-0	CORD GUARD 10		1			
061	695107-1	POWER SUPPLY CORD 1.5-2-2.5		1			
062	183615-9	HANDLE SET		1			
C10	421833-4	SPONGE SHEET		1			
D10		INC. 56					
063	645200-1	NOISE SUPPRESSOR		1			
064	631553-4	SOFT START CIRCUIT		1			
065	924426-1	WING BOLT M8X20		1			
066	942201-3	SPRING WASHER 8		1			
067	941201-0	FLAT WASHER 8		1			
068	165343-8	BASE		1			
069	688106-0	LINE FILTER		1	*		
069-1	688131-1	LINE FILTER	O	1	*		
069-2	688131-1	LINE FILTER	O	1			
070	265506-7	SHOULDER HEX. BOLT M6		1			
071	265506-7	SHOULDER HEX. BOLT M6		1			
A01	782210-8	SOCKET WRENCH 17		1			
A02	824697-9	PLASTIC CARRYING CASE		1	*		
C10	416401-6	LATCH		2	*		
C20	819145-1	MAKITA LOGO LABEL		1	*		
A02-1	824697-9	PLASTIC CARRYING CASE	O	1			
C10	163467-4	LATCH		2			
C20	819145-1	MAKITA LOGO LABEL		1			
F02	192613-2	ELBOW JOINT 32		1			