Model No.3712 TRIMMER

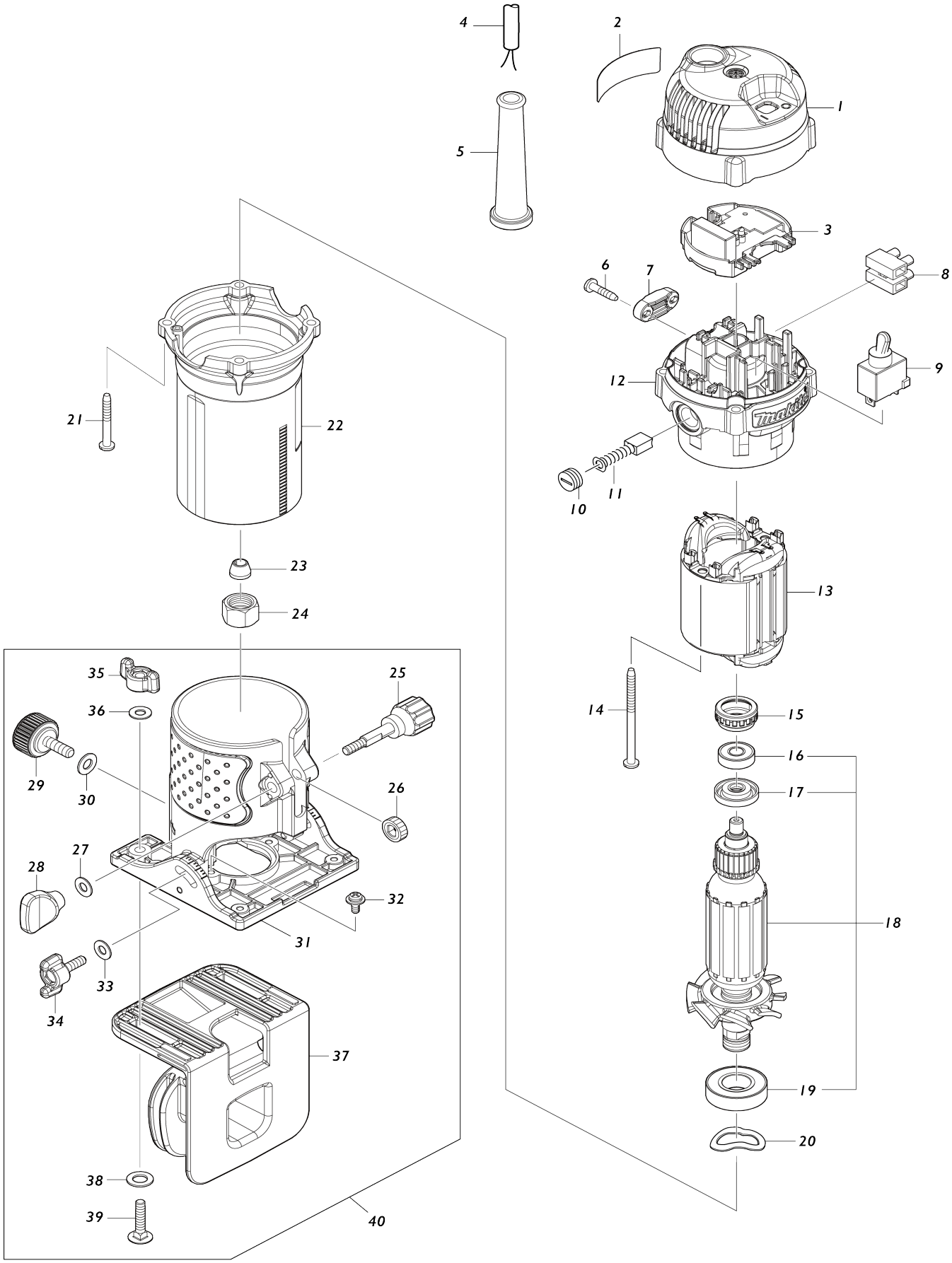

Model No.3712 TRIMMER

Item No.	Parts No.	Description	Interchangeability	Q'ty	New/ Old	Note1	Note2
001	413774-8	TOP COVER		1			
002	811T73-6	3712 NAME PLATE		1			
003	620F47-0	CONTROLLER		1			
C10	646358-9	LINE COIL		1			
004	665394-6	POWER SUPPLY CORD 1.0-2-2.5		1			
005	682569-2	CORD GUARD 8-85		1			
006	266326-2	TAPPING SCREW 4X18		2			
007	687124-5	STRAIN RELIEF		1			
008	654531-7	TERMINAL BLOCK 2P		1	*		
008-1	654741-6	TERMINAL BLOCK	O	1			
009	651066-9	SWITCH ST115A-TB-S1		1			
010	643550-8	BRUSH HOLDER CAP 5-8		2			
011	191940-4	CARBON BRUSH CB-411		1	*		
011-1	195010-1	CARBON BRUSH SET CB-411	O	1			
012	141D19-5	BRACKET COMPLETE		1			
013	634774-7	FIELD		1	*		
013-1	594774-8	FIELD ASS'Y 240V	<	1			
C10	654100-4	RING TERMINAL		2			
C20	654485-8	PARALLEL SPLICE		2			
014	266340-8	TAPPING SCREW 4X65		2			
015	421494-0	RUBBER RING 19		1			
016	210034-7	BALL BEARING 607LLB		1			
017	681668-7	INSULATION WASHER		1			
018	515634-1	ARMATURE ASS'Y 240V		1			
C10	241667-7	FAN 52		1			
D10		INC. 16,17,19					
019	211489-9	BALL BEARING 6002LLUX		1			
020	267785-3	WAVE WASHER 23		1			
021	266351-3	TAPPING SCREW 4X35		4			
022	141D78-9	MOTOR HOUSING COMPLETE		1			
C10	8034K8-2	SCALE LABEL		1			
023	763662-2	COLLET CONE 6		1			
024	763661-4	COLLET NUT 6		1			
025	265771-8	THUMB SCREW M5X33		1			
026	226217-9	SPUR GEAR 16		1			
027	941101-4	FLAT WASHER 5		1			
028	252652-5	THUMB NUT M5		1			
029	251814-2	SCREW M6X18		1			
030	941151-9	FLAT WASHER 6		1			
031	154670-8	BASE COMPLETE		1			
032	911114-9	PAN HEAD SCREW M4X10		2			
033	941101-4	FLAT WASHER 5		2			
034	265761-1	THUMB SCREW M5X16		1			
035	252653-3	THUMB NUT M5		2			
036	941101-4	FLAT WASHER 5		2			
037	414304-8	TRIMMER SHOE		1			
038	267240-5	FLAT WASHER 8		2			

039	923241-0	CAP SQUARE NECK BOLT M5X25		2			
040	194269-7	TRIMMER BASE ASS'Y SET		1			
D10		INC. 25-39					
A01	122703-7	TRIMMER GUIDE ASS'Y		1			
C10	251471-6	- FLAT HEAD SCREW M5		1			
C20	265135-6	+ COUNTERSUNK HEAD SCREW M4X10		1			
C30	265763-7	THUMB SCREW M6X25		1			
C40	265764-5	THUMB SCREW M6		1			
C50	317788-8	GUIDE HOLDER		1			
C60	324378-0	ROLLER 11		1			
C70	341136-9	HOOK		1			
C80	941151-9	FLAT WASHER 6		1			
A02	122704-5	STRAIGHT GUIDE ASS'Y		1			
C10	252649-4	THUMB NUT M6		1			
C20	266339-3	CAP SQUARE NECK BOLT M6X20		1			
C30	343593-7	GUIDE PLATE		1			
A03	343577-5	TEMPLET GUIDE 10		1			
A04	781036-5	WRENCH 10		1			
A05	781037-3	WRENCH 17		1			
A07	733239-7	STRAIGHT BIT 6		1	*		
A07-1	191Y83-2	STRAIGHT BIT 6 SET	O	1			
F43	194267-1	TRIMMER BASE ASSEMBLY SET		1			
F44	194268-9	TRIMMER BASE ASSEMBLY SET		1			
F45	194269-7	TRIMMER BASE ASS'Y SET		1			
F46	194270-2	TRIMMER BASE ASS'Y SET		1			

Please state Parts No. when your order.

Print Date 13/06/2024