Model No.2012NB Planer

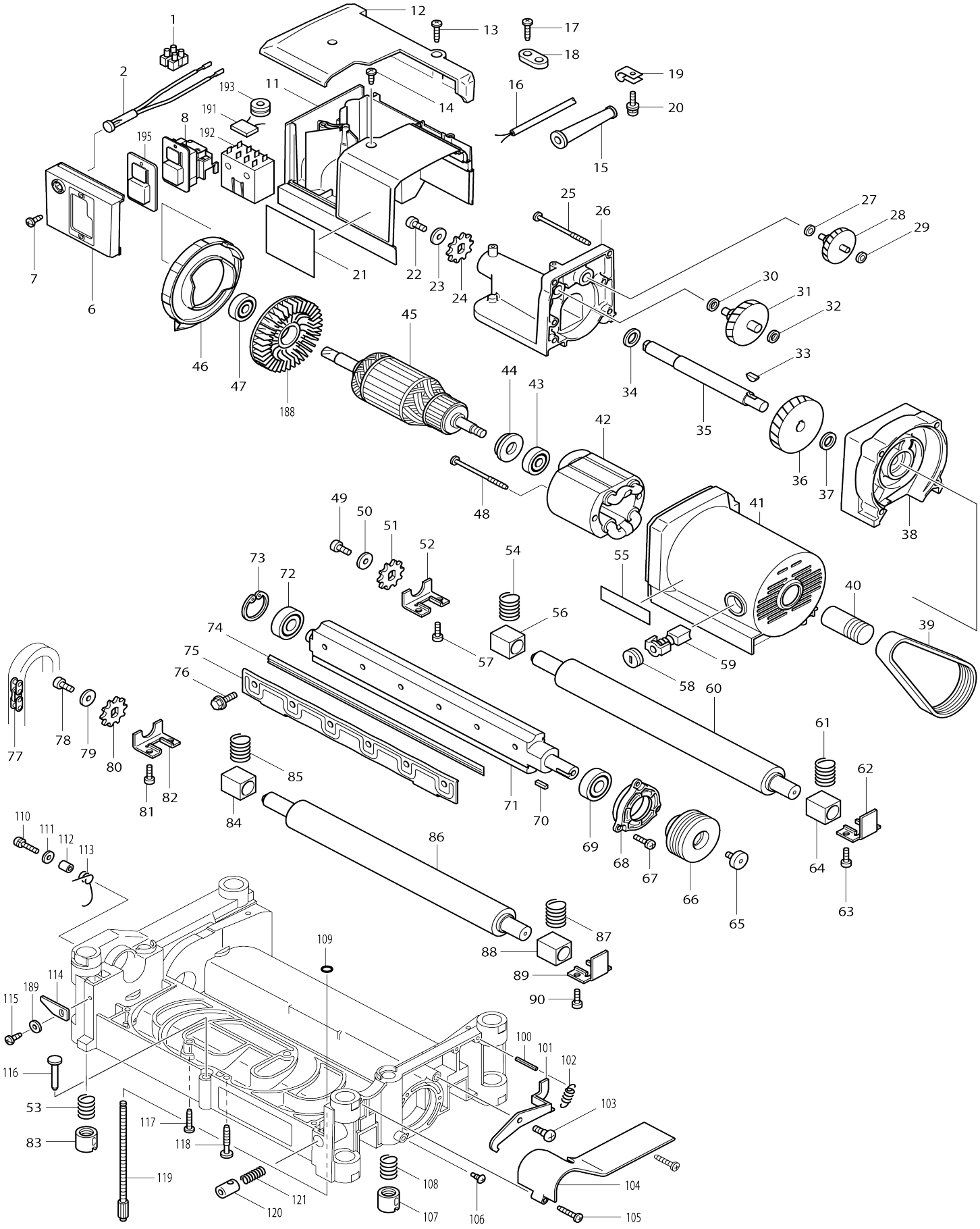

Model No.2012NB Planer

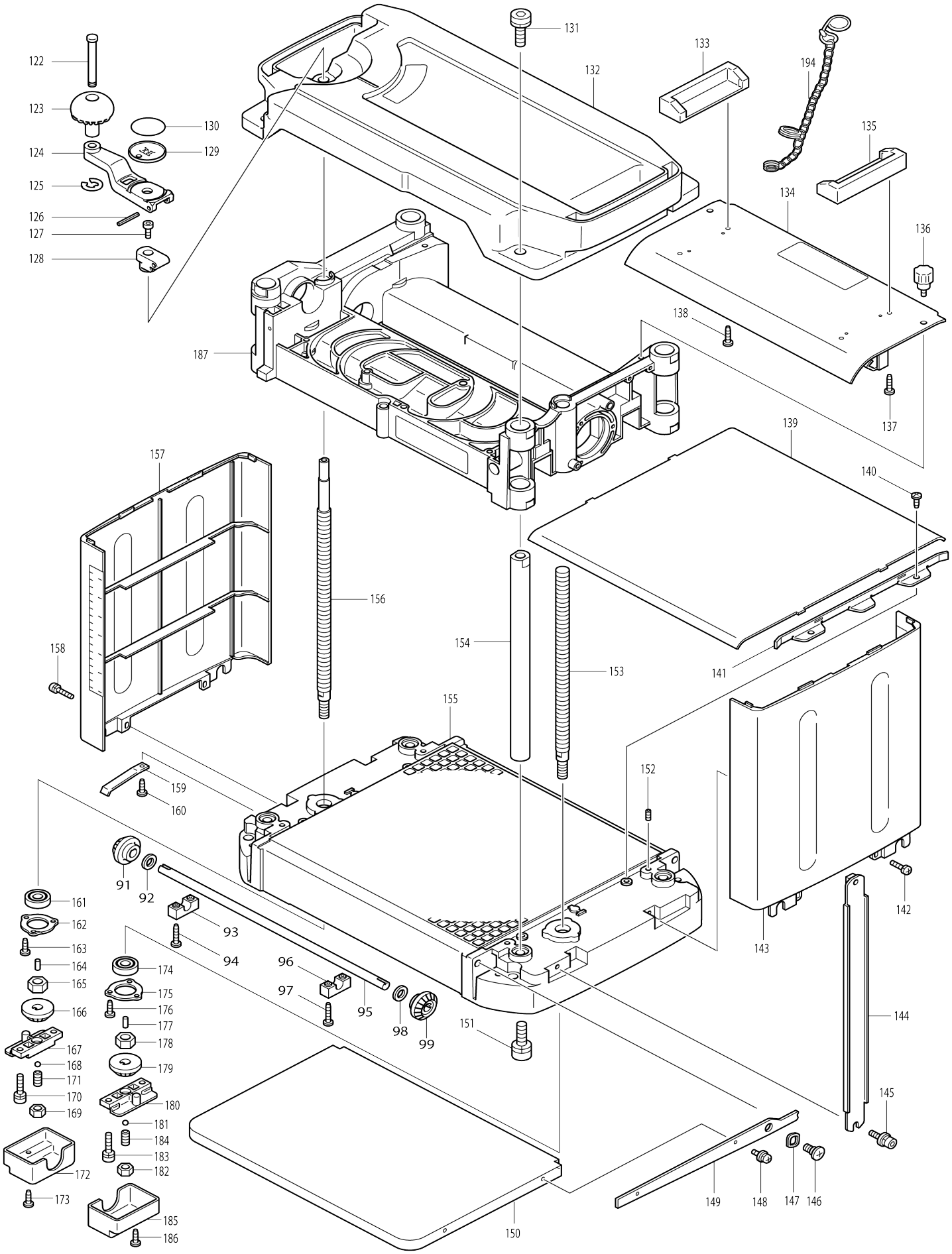

Model No.2012NB Planer

Item No.	Parts No.	Description	Interchangeability	Q'ty	New/ Old	Note1	Note2
001	654561-8	Terminal block		1			
002	631371-0	Pilot lamp complete		1			
006	418416-9	Switch cover		1			
007	251991-0	Pan head tapping screw 4X12		2			
008	632519-7	Switch unit		1			
011	417041-3	Switch box		1			
012	417038-2	Switch box cover		1			
013	265995-6	Binding head tapping screw 4X18		2			
014	266026-4	Binding head tapping screw 4X12		2			
015	682516-3	Cord guard 9.3-85		1	*		
015-1	682504-0	Cord guard 10-85	O	1			
016	665865-3	Power supply cord 1.0-2-2.5		1			
017	265995-6	Binding head tapping screw 4X18		2			
018	687053-2	Strain relief		1	*		
018-1	687052-4	Strain relief	<	1	*		
018-2	687124-5	Strain relief	O	1			
019	687042-7	Strain relief		1			
020	911128-8	Pan head screw M4X16 WR		1			
021	851968-1	Name plate 2012NB		1			
022	922312-0	Hex. socket head bolt M6X12		1			
023	267080-1	Flat washer 6		1			
024	221525-3	Sprocket 10		1			
025	266059-9	Binding head tapping screw 5X75		4			
026	151739-9	Gear housing cover complete		1			
C10	214014-5	Plane bearing 6		1			
C20	214022-6	Plane bearing 8		1			
C30	214156-5	Plane bearing 14		1			
C40	256041-6	Pin 6		2			
027	253715-0	Flat washer 6		1			
028	226134-3	Gear complete 8-50		1			
029	253715-0	Flat washer 6		1			
030	253215-0	Flat washer 8		1			
031	226135-1	Gear complete 8-46		1			
032	253215-0	Flat washer 8		1			
033	254001-2	Woodruff key 4		1			
034	253760-5	Flat washer 14		1			
035	323923-8	Drive shaft		1			
036	226518-5	Helical gear 47		1			
037	253744-3	Flat washer 12		1			
038	151738-1	Gear housing complete		1			
C10	214014-5	Plane bearing 6		1			
C20	214022-6	Plane bearing 8		1			
C30	214109-4	Plane bearing 12		1			
039	225083-1	Poly V-belt 8-341		1			
040	222155-3	V-pulley 8-23.5L		1			

041	151737-3	Motor housing complete		1			
C10	643660-1	Brush holder 6.5-13.5		2	*		
C11	643653-8	Brush holder 6.5X13.5	O	2	*		
C12	643536-2	Brush holder 6.5X13.5	O	2			
042	526104-5	Field assembly 240V		1			
C10	654020-2	Ring terminal 36L		2			
C20	654502-4	Non-insulated splice		2			
043	211087-9	Ball bearing 6200DDW		1	*		
043-1	210313-3	Sprocket 40-17B	O	1			
044	681623-9	Insulation washer		1			
045	516813-4	Armature assembly 220-240V		1	*		
045		INC. 43,44,47,188			*		
045-1	510595-0	Armature assembly 220-240V	O	1			
045-1		INC. 43,44,47,188					
046	417033-2	Baffle plate		1			
047	211087-9	Ball bearing 6200DDW		1	*		
047-1	210313-3	Sprocket 40-17B	O	1			
048	266059-9	Binding head tapping screw 5X75		2			
049	922312-0	Hex. socket head bolt M6X12		1			
050	267080-1	Flat washer 6		1			
051	221525-3	Sprocket 10		1			
052	343844-8	Metal cover B		1			
053	233016-2	Compression spring 15		1			
054	231459-2	Compression spring 13		1			
055	819064-1	Makita logo label		1	*		
056	214251-1	Plane bearing 17		1			
057	922221-3	Hex. socket head bolt M5X16 W		2			
058	643650-4	Holder cap 6.5-13.5		2	*		
058-1	643650-4	Holder cap 6.5-13.5	O	2			
059	181044-0	Carbon brush CB-153		1	*		
059-1	194985-1	Carbon brush set CB-153	O	1			
060	162216-6	Roller		1			
061	233392-4	Compression spring 13A		1			
062	341685-6	Metal cover A		1			
063	922221-3	Hex. socket head bolt M5X16 W		2			
064	214251-1	Plane bearing 17		1			
065	265854-4	Hex. socket head bolt M6X12		1			
066	222154-5	V-pulley 8-54		1			
067	911128-8	Pan head screw M4X16 WR		3			
068	317259-5	Bearing box		1			
069	211206-7	Ball bearing 6202LLB		1	*		
069-1	210314-1	Ball bearing 6202LLB	O	1			
070	254204-8	Key 4		1			
071	323928-8	Drum		1			
072	211206-7	Ball bearing 6202LLB		1	*		
072-1	210314-1	Ball bearing 6202LLB	O	1			
073	962153-2	Retaining ring (INT) R-35		1			
074	793346-8	Planer blade 306 (2 pcs)		1			
075	343682-8	Set plate		2			
076	251609-3	Hex. head flange bolt M6X17		12			
077	225520-5	Chain 35-46		1			

078	922312-0	Hex. socket head bolt M6X12		1			
079	267080-1	Flat washer 6		1			
080	221525-3	Sprocket 10		1			
081	922221-3	Hex. socket head bolt M5X16 W		2			
082	343844-8	Metal cover B		1			
083	252426-4	Nut M14		1			
084	214251-1	Plane bearing 17		1			
085	231459-2	Compression spring 13		1			
086	162216-6	Roller		1			
087	233392-4	Compression spring 13A		1			
088	214251-1	Plane bearing 17		1			
089	341685-6	Metal cover A		1			
090	922221-3	Hex. socket head bolt M5X16 W		2			
091	226786-0	Straight bevel gear 15		1			
092	253828-7	Flat washer 10		1			
093	417034-0	Shaft retainer		1			
094	266040-0	Binding head tapping screw 4X25		2			
095	323926-2	Shaft 10		1			
096	417034-0	Shaft retainer		1			
097	266040-0	Binding head tapping screw 4X25		2			
098	253828-7	Flat washer 10		1			
099	226786-0	Straight bevel gear 15		1			
100	951122-8	Spring pin 4-28		1			
101	344815-8	Lock plate		1			
102	231793-0	Tension spring 5		1			
103	251283-7	Pan head shoulder screw M5X15.5		1			
104	417035-8	Belt cover		1			
105	266040-0	Binding head tapping screw 4X25		2			
106	251322-3	Pan head screw M5X12		2			
107	252427-2	Nut M14L		1			
108	233016-2	Compression spring 15		1			
109	213009-5	O-ring 4		1			
110	911233-1	Pan head screw M5X20 WR		1			
111	253194-2	Flat washer 5		1			
112	257600-9	Sleeve 6		1			
113	231588-1	Torsion spring 9		1			
114	344068-9	Pointer		1			
115	266026-4	Binding head tapping screw 4X12		1			
116	322229-1	Gauge		1			
117	266040-0	Binding head tapping screw 4X25		2			
118	266173-1	Binding head tapping screw 5X30		2	*		
118-1	266553-1	Binding head tapping screw 5X30	O	2			
119	265736-0	Thumb screw M6X135		1	*		
119-1	265F42-9	THUMB SCREW M6X135	O	1			
120	323927-0	Half nut		1			
121	231226-5	Compression spring 11		1			

122	256688-6	Flat fillister HD. pin 8		1			
123	271296-2	Knob 45		1			
124	272026-4	Handle 160		1	*		
124-1	272028-0	Handle 160	<	1			
125	961012-7	Stop ring (EXT) E-6		1			
126	951122-8	Spring pin 4-28		1			
127	266086-6	Hex. socket head bolt M5X16		1			
128	317261-8	Joint		1	*		
128-1	317760-0	Joint	<	1			
129	417032-4	Gauge		1			
130	816358-5	Scale label		1			
131	266240-2	Hex. socket head bolt M10X25		4			
132	151920-2	Top cover complete		1	*		
C10	816359-3	Operation label		1	*		
C20	817737-0	Caution label		1	*		
132-1	153781-6	Top cover complete	<	1	*		
C10	816359-3	Operation label		1	*		
C20	817737-0	Caution label		1	*		
132-2	153779-3	Top cover complete	<	1			
C10	816359-3	Operation label		1			
133	417036-6	Tool box holder		1			
134	165272-5	Chip cover		1	*		
134-1	165379-7	Chip cover	O	1			
135	417036-6	Tool box holder		1			
136	265716-6	Thumb screw M5X10		2			
137	265995-6	Binding head tapping screw 4X18		2			
138	265995-6	Binding head tapping screw 4X18		2			
139	344816-6	Table plate		1			
140	266026-4	Binding head tapping screw 4X12		4			
141	344819-0	Guide plate		2			
142	911128-8	Pan head screw M4X16 WR		2			
143	417040-5	Side cover		1			
144	344820-5	Side beam		2			
145	922323-5	Hex. socket head bolt M6X16 WR		4			
146	251217-0	Binding head shoulder screw M8		4			
147	253932-2	Wave washer 10		4			
148	911108-4	Pan head screw M4X8 WR		8			
149	344818-2	Arm		4			
150	344817-4	Sub table plate		2			
151	266240-2	Hex. socket head bolt M10X25		4			
152	266213-5	Hex. socket set screw (flat point) M5X12		4			
153	323925-4	Screw L		1			
154	331562-0	Column 20		4			
155	317266-8	Table		1	*		
155-1	317763-4	Table	<	1			
156	323924-6	Screw R		1			
157	151886-6	Side cover complete		1	*		
C10	816354-3	Scale label		1	*		
157-1	142383-3	Side cover complete	<	1			

C10	816354-3	Scale label		1			
158	911128-8	Pan head screw M4X16 WR		2			
159	232195-3	Leaf spring		2			
160	266026-4	Binding head tapping screw 4X12		2			
161	211088-7	Ball bearing 6000DDW		1	*		
161-1	210315-9	Ball bearing 6000DDW	O	1			
162	285698-6	Bearing retainer 33		1			
163	266026-4	Binding head tapping screw 4X12		3			
164	256226-4	Pin 4		1			
165	252164-8	Hex. nut M10-17		1			
166	226791-7	Straight bevel gear 15		1			
167	317260-0	Support		1			
168	216011-7	Steel ball 5.6		1			
169	931403-6	Hex. nut M8		1			
170	922231-0	Hex. socket head bolt M5X20 W		2			
171	265846-3	Hex. socket set screw (cup point) M8X16		1			
172	417030-8	Gear cover		1			
173	266026-4	Binding head tapping screw 4X12		1			
174	211088-7	Ball bearing 6000DDW		1	*		
174-1	210315-9	Ball bearing 6000DDW	O	1			
175	285698-6	Bearing retainer 33		1			
176	266026-4	Binding head tapping screw 4X12		3			
177	256226-4	Pin 4		1			
178	252164-8	Hex. nut M10-17		1			
179	226791-7	Straight bevel gear 15		1			
180	317260-0	Support		1			
181	216011-7	Steel ball 5.6		1			
182	931403-6	Hex. nut M8		1			
183	922231-0	Hex. socket head bolt M5X20 W		2			
184	265846-3	Hex. socket set screw (cup point) M8X16		1			
185	417030-8	Gear cover		1			
186	266026-4	Binding head tapping screw 4X12		1			
187	153731-1	Main frame complete		1	*		
C10	817283-3	Caution label		1	*		
187-1	153731-1	Main frame complete	<	1			
C10	817283-3	Caution label		1			
188	240003-4	Fan 80		1	*		
189	941051-3	Flat washer 4		1			
191	645200-1	Noise suppressor		1			
192	652769-8	Relay BW5760192K		1	*		
192-1	652769-8	Relay BW5760192K	O	1	*		
192-2	638897-3	Relay unit	O	1			
193	688106-0	Line filter		1	*		
193-1	688131-1	Line filter	O	1	*		
193-2	688131-1	Line filter	O	1			
194	282017-7	Chain		1			

195	414301-4	Dust cover		1			
202	213009-5	O-ring 4		2			
A01	762014-4	Magnetic holder		2			
A02	782203-5	Box wrench 9		1			
A03	783208-8	Hex. wrench 2.5		1			
A04	824002-0	Plastic case		1			
A05	122696-8	Hood assembly		1	*		
C10	344834-4	Hood holder		1	*		
C20	415448-7	Hood		1	*		
A05-1	193036-7	Hood set	O	1			
C10	344834-4	Hood holder		1			
C20	415448-7	Hood		1			
A06B	193902-8	Stand set		1	*		
C11	265823-5	Round head square neck bolt M8 X14		16	*		
C16	286215-5	Cap 28		4	*		
C21	344588-3	Stand leg		4	*		
C26	344589-1	Stand stay A		2	*		
C31	345395-7	Stand stay B		2	*		
C36	921476-7	Hex. head bolt M8X55 W		4	*		
C41	931402-8	Hex. nut M8		20	*		
C46	941201-0	Flat washer 8		4	*		
C51	942201-3	Spring washer 8		16	*		
C56	846285-2	Carton		1	*		
A06-1 B	194053-0	Stand set	X	1	*		
A06-2 B	198689-7	Stand set	<	1	*		
A06-3 B	198688-9	Stand set	O	1			
A07	416772-1	Push stick		1			
F01	193902-8	Stand set		1			
F02	193036-7	Hood set		1			
C10	344834-4	Hood holder		1			
C20	415448-7	Hood		1			
F45-1	198688-9	Stand set	<	1			