Model No.M8700 Rotary Hammer

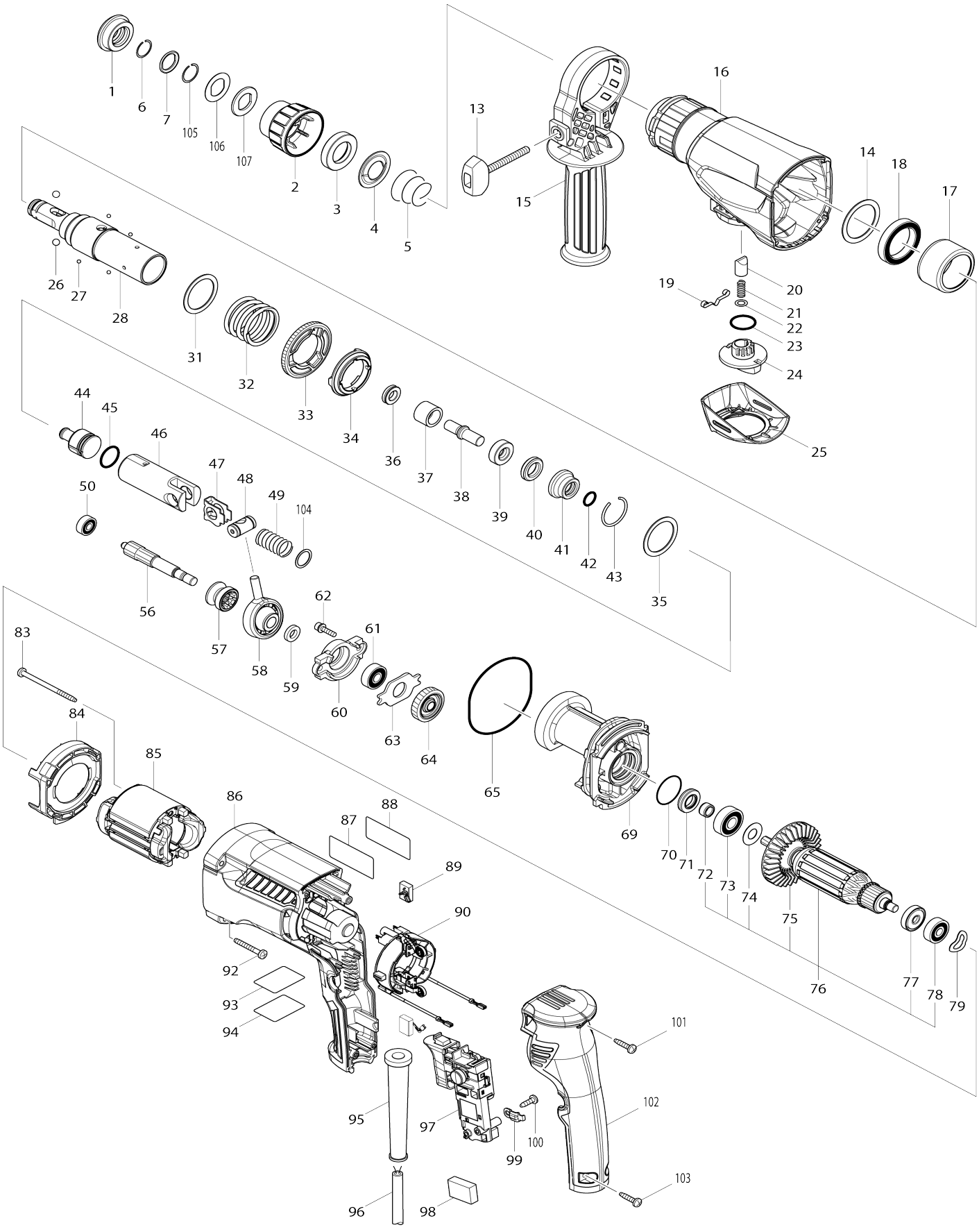

Model No.M8700 Rotary Hammer

Item No.	Parts No.	Description	Interchangeability	Q'ty	New/ Old	Note1	Note2
001	286288-8	Cap 35		1			
002	452986-8	Chuck cover		1	*		
002-1	456529-8	Chuck cover	S	1	*		
002-2	455393-4	Chuck cover	<	1			
003	325813-1	Ring 21		1			
004	346177-0	Guide washer		1			
005	233916-6	Conical compression spring 21-29		1			
006	233989-9	Ring spring 14		1			
007	346221-3	Washer 16		1	*		
007-1	346834-0	Washer 16	S	1			
013	265795-4	Thumb screw M6X52		1	*		
013-1	265D68-9	Thumb screw M6X52	O	1			
014	267415-6	Flat washer 33		1			
015	452985-0	Grip 34		1			
016	143120-8	Gear housing complete		1			
C10	213636-8	Oil seal 25		1			
017	346178-8	Cup sleeve		1			
018	211423-9	Ball bearing 6806DDW		1			
019	232152-1	Leaf spring		1			
020	325785-0	Push cone		1			
021	234147-0	Compression spring 5		1			
022	253308-3	Thin washer 6		1			
023	213258-4	O-ring 17.5		1			
024	452983-4	Change lever		1			
025	452982-6	Change lever cover		1			
026	216022-2	Steel ball 7.0		2			
027	216019-1	Steel ball 3		4	*		
027-1	216068-8	Steel ball 3	<	4			
028	141068-8	Tool holder complete		1	*		
028-1	144273-6	Tool holder complete	<	1			
031	267153-0	Flat washer 30		1			
032	234222-2	Compression spring 31		1			
033	227268-5	Spur gear 51		1			
034	313218-7	Driving flange		1			
035	267153-0	Flat washer 30		1			
036	213075-2	X-ring 9		1			
037	325782-6	Sleeve 9A		1			
038	325789-2	Impact bolt A		1			
039	325794-9	Ring 10A		1			
040	424267-0	Cushion ring 12		1			
041	325798-1	O-ring case A		1			
042	213073-6	O-ring 9		1			
043	233979-2	Ring spring 28		1			
044	326096-6	Striker		1			
045	213258-4	O-ring 17.5		1			
046	310345-1	Piston cylinder		1			
047	346036-8	Guide plate		1			

048	326097-4	Piston joint		1	*		
048-1	324215-8	Piston joint	O	1			
049	234098-7	Compression spring 14		1			
050	210028-2	Ball bearing 606ZZ		1			
056	227269-3	Spur gear 10		1			
057	223174-2	Clutch cam		1			
058	219021-3	Swash bearing 10		1			
059	257321-3	Ring 8		1			
060	310344-3	Bearing box		1			
061	210029-0	Ball bearing 608ZZ		1			
062	266437-3	Hex. socket head bolt M4X16		2			
063	285735-6	Bearing retainer		1			
064	227748-1	Helical gear 27		1			
065	213727-5	O-ring 63		1			
069	141664-2	Inner housing complete		1			
C10	443153-6	Felt		1			
070	213407-3	O-ring 26		1			
071	213678-2	Oil seal 12		1			
072	262571-7	Sleeve 8		1			
073	210067-2	Ball bearing 6000ZZ		1			
074	267213-8	Flat washer 10		1			
075	240084-8	Fan 60		1			
076	515859-7	Armature assembly 240V		1			
076		INC. 72-75,77,78					
077	681652-2	Insulation washer		1			
078	210030-5	Ball bearing 627ZZ		1			
079	267804-5	Wave washer 15		1			
083	266334-3	Binding head tapping screw 4X60		2			
084	452984-2	Baffle plate		1			
085	633793-0	Field 220-240V		1			
086	453915-4	Motor housing		1	*		
086-1	452979-5	Motor housing	<	1	*		
086-2	413S68-5	Motor housing	>	1			
087	850W86-0	Name plate M8700		1			
088	890304-6	Clear label		1	*		
089	194722-3	Carbon brush set CB-459		1	*		
089-1	195026-6	Carbon brush set CB-459	O	1			
090	638747-2	Brush holder unit		1			
092	266361-0	Binding head tapping screw 4X30		4			
093	850W88-6	Serial No. label M8700		1			
094	890297-7	Clear label		1	*		
095	682566-8	Cord guard 10		1			
096	665890-4	Power supply cord 1.0-2-4.0		1	*		
096-1	695490-6	Power supply cord 1.0-2-4.0	O	1	*		
096-2	665890-4	Power supply cord 1.0-2-4.0	O	1			
097	650671-9	Switch TG853TB-1C		1	*		
097-1	650671-9	Switch TG853TB-1C	O	1			
098	645190-8	Noise suppressor		1			
099	687682-1	Strain relief		1			
100	266385-6	Binding head tapping screw 4X1		1			

		4					
101	266326-2	Binding head tapping screw 4X18		1			
102	453916-2	Handle cover		1	*		
102-1	452981-8	Handle cover	<	1	*		
102-2	413S72-4	Handle cover	<	1			
103	266326-2	Binding head tapping screw 4X18		2			
104	267447-3	Flat washer 14		1			
105	233992-0	Ring spring 15		1			
106	267437-6	Flat washer 17		1	*		
106-1	267114-0	Flat washer 17	S	1			
107	424364-2	Rubber washer 16		1	*		
A01	321144-6	Depth gauge		1			
A02	821660-3	Plastic case		1			
C10	452432-1	Slide latch		2			
C20	806G57-9	Makita MT logo label		1			
A03	806N84-8	Plastic case label M8700		2	*		
A03-1	807W93-4	Plastic case label M8700	<	2			
B01	195796-7	Hammer service kit		1			
C10	195127-0	Oil vessel set		2			
B01		INC. 1,6,26,36,40,42,43,45,89					
B01		INC. 105,107					
F01	195127-0	Oil vessel set		1			
F06	1918R1-4	SEALING CAP B SET		1			
F07	1918L7-0	DUST EXTRACTION PAD SET		1			
G12	1914X3-8	Dust extraction pad set		1			