Model No.M8600 DEMOLITION HAMMER

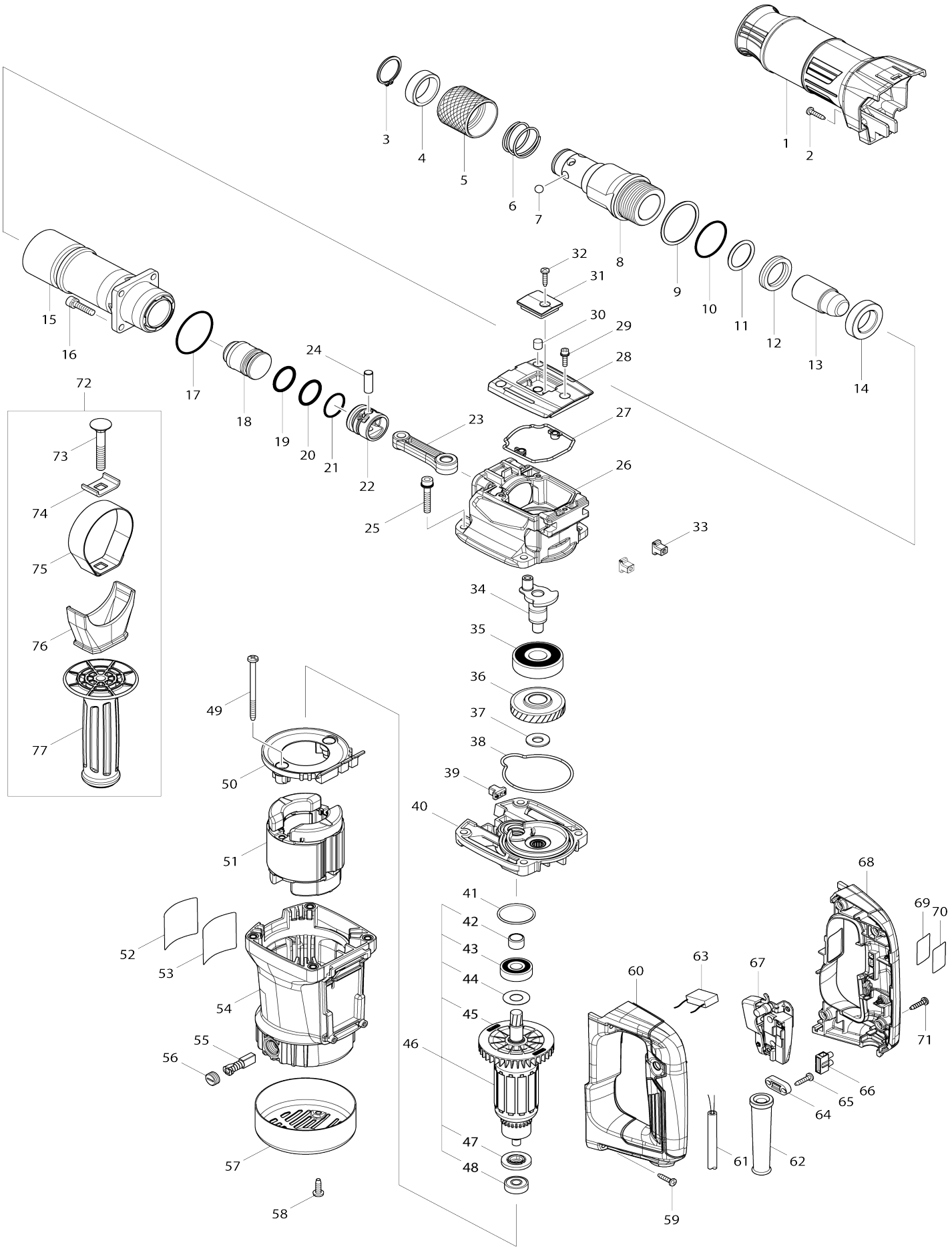

Model No.M8600 DEMOLITION HAMMER

Item No.	Parts No.	Description	Interchangeability	Q'ty	New/ Old	Note1	Note2
001	455159-2	BARREL COVER		1			
002	266326-2	TAPPING SCREW 4X18		1			
003	961108-4	RETAINING RING S-28		1			
004	257206-3	RING 29		1			
005	331518-3	CHANGE RING		1			
006	233191-4	COMPRESSION SPRING 30		1			
007	216004-4	STEEL BALL 7.9		6			
008	326423-7	TOOL HOLDER		1			
009	267484-7	FLAT WASHER 43		1			
010	213508-7	O RING 38		1			
011	213411-2	O RING 27		1			
012	213428-5	X RING 28		1			
013	326422-9	IMPACT BOLT		1			
014	257361-1	RING 24		1			
015	142706-5	BARREL COMPLETE		1			
016	265914-2	HEX. SOCKET HEAD BOLT M6X25		4			
017	213569-7	O RING 45		1			
018	326421-1	STRIKER		1			
019	213787-7	O-RING 22		1			
020	213787-7	O-RING 22		1			
021	213380-7	O RING 24		1			
022	455158-4	PISTON		1			
023	455157-6	CONNECTING ROD		1			
024	268104-6	PIN 8		1			
025	266902-2	H.S. HEAD BOLT M6X35 WITH WR		4			
026	319292-3	CRANK HOUSING		1			
027	424633-1	SEAL RING A		1			
028	455160-7	CRANK CAP		1			
029	266948-8	HEX S. H. BOLT M4X20 WITH WR		3			
030	443153-6	FELT		1			
031	455161-5	CRANK CAP COVER		1			
032	266326-2	TAPPING SCREW 4X18		1			
033	455165-7	FIX GUIDE		2			
034	326420-3	CRANK SHAFT		1			
035	211498-8	BALL BEARING 6303LLU		1			
036	227792-8	HELICAL GEAR 35		1			
037	253024-7	FLAT WASHER 10		1			
038	424632-3	SEAL RING B		1			
039	455165-7	FIX GUIDE		1			
040	142703-1	GEAR HOUSING COMPLETE		1			
C10	213231-4	OIL SEAL 15		1			
041	213459-4	O RING 32		1			
042	331596-3	SLEEVE 12		1			
043	210118-1	BALL BEARING 6201DDW		1	*		
043-1	210337-9	BALL BEARING 6201DDW	O	1			
044	253759-0	FLAT WASHER 12		1			
045	241863-7	FAN 70		1			

046	513924-6	ARMATURE ASS'Y 240V		1			
046		INC. 42-45,47,48					
047	681644-1	INSULATION WASHER		1			
048	210029-0	BALL BEARING 608ZZ		1			
049	266386-4	TAPPING SCREW 5X75		2			
050	455162-3	BAFFLE PLATE		1			
051	594664-5	FIELD ASS'Y 240V		1			
C10	654019-7	RING TERMINAL		2			
C20	654501-6	CONNECTOR P-1.25		2	*		
C21	654485-8	PARALLEL SPLICE	>	2			
052	804Y03-4	CLEAR LABEL		1	*		
053	850Y58-7	M8600 NAME PLATE		1			
054-1	142704-9	MOTOR HOUSING COMPLETE		1			
C10	643603-3	BRUSH HOLDER 6-10		2			
055	181038-5	A.C. CARBON BRUSH CB-105		1			
056	643600-9	BRUSH HOLDER CAP 6-10		2			
057	284059-7	REAR COVER		1			
058	266388-0	TAPPING SCREW 5X16		2			
059	266326-2	TAPPING SCREW 4X18		4			
060-1	187982-4	HANDLE SET		1			
060-1		INC. 68					
061	665865-3	POWER SUPPLY CORD 1.0-2-2.5		1	*		
061-1	695480-9	POWER SUPPLY CORD 1.0-2-2.5	O	1	*		
061-2	665865-3	POWER SUPPLY CORD 1.0-2-2.5	O	1			
062	682540-6	CORD GUARD 9.3-90		1	*		
062-1	682574-9	CORD GUARD 10-90	O	1			
063	645240-9	NOISE SUPPRESSOR		1			
064	687124-5	STRAIN RELIEF		1			
065	266326-2	TAPPING SCREW 4X18		2			
066	654532-5	TERMINAL BLOCK 1P		1			
067	650253-7	SWITCH TN19		1			
068-1	187982-4	HANDLE SET		1			
068-1		INC. 60					
069	850Y60-0	M8600 SERIAL NO. LABEL		1			
070	893072-0	CLEAR LABEL		1	*		
071	266326-2	TAPPING SCREW 4X18		4			
072	126457-8	GRIP ASS'Y		1			
072		INC. 73-77					
073	266895-3	CUP SQUARE NECK BOLT M8X55		1			
074	344492-6	PLATE		1			
075	346794-6	GRIP SPRING 62		1			
076	455166-5	SIDE GRIP BASE 60		1			
077	162363-3	GRIP 34 COMPLETE		1			
A01	821658-0	PLASTIC CARRYING CASE		1			
C10	452432-1	SLIDE LATCH		2			
C20	806G57-9	MAKITA MT LOGO LABEL		1			
A02	808M30-1	M8600X2 PLASTIC CASE LABEL		2			
A02-1	808D77-1	PLASTIC CASE LABEL		2			
A03	194683-7	GREASE VESSEL SET		1	*		
A03-1	198993-4	GREASE VESSEL SET	<	1			
A05	A-80450	BULL POINT 17X280		1			

B01	196918-2	HAMMER SERVICE KIT		1			
C10	181490-7	HAMMER GREASE 30G		2	*		
C11	1914C5-7	GREASE SET	O	2			
B01		INC. 9,11,12,19,20,55					
E01	806F30-3	SOUND 102DB LABEL		1			

Please state Parts No. when your order.

Print Date 12/18/2024