Model No.M6600 Mixer

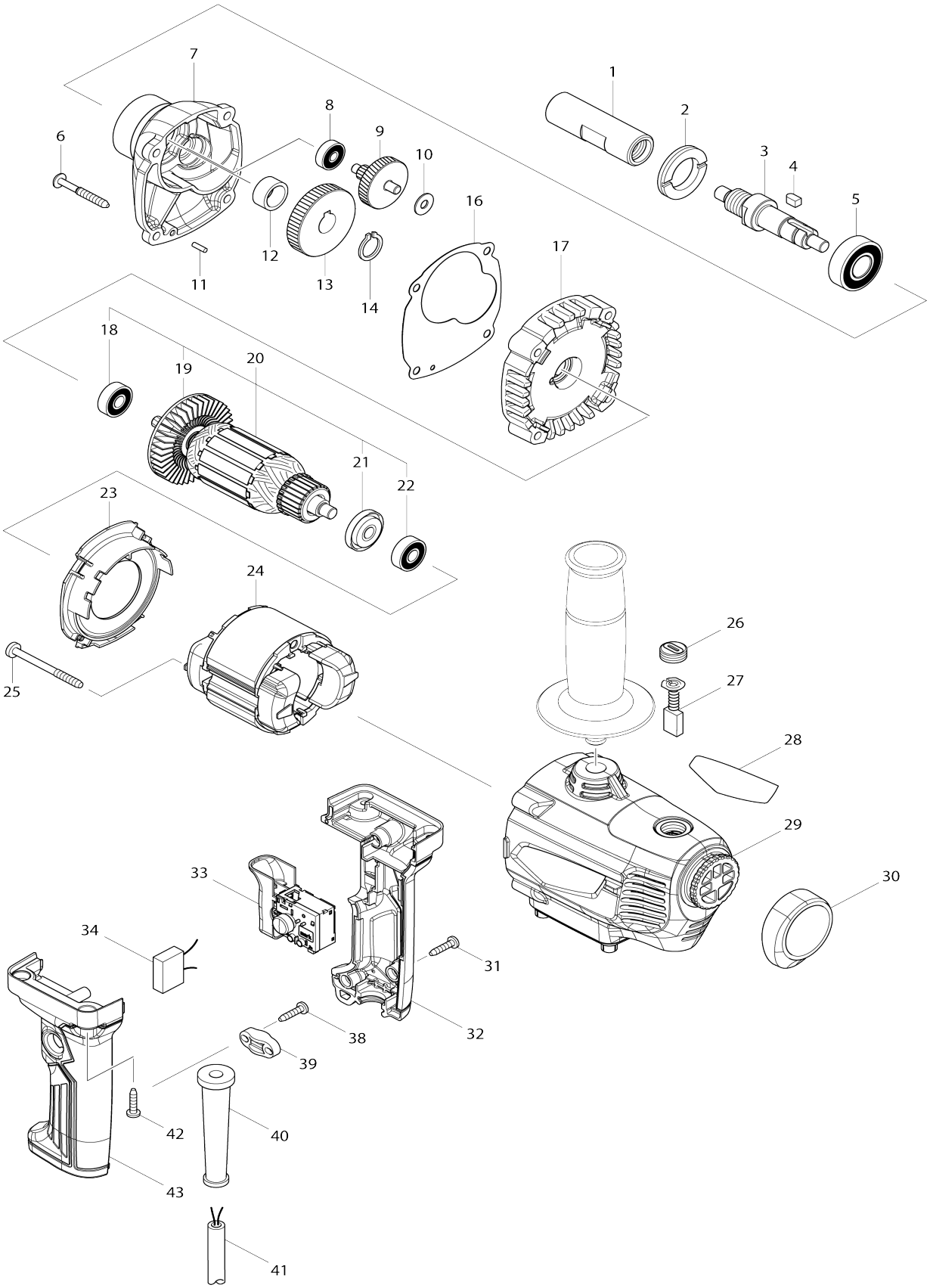

Model No.M6600 Mixer

Item No.	Parts No.	Description	Interchangeability	Q'ty	New/ Old	Note1	Note2
001A	324929-9	Shaft holder 5/8-M14		1	*		
001-1A	324929-9	Shaft holder 5/8-M14	<	1			
001-1B	324929-9	Shaft holder 5/8-M14		1			
002	285848-3	Bearing retainer 23-36		1			
003	326439-2	Spindle		1			
004	254211-1	Key 5		1			
005	211487-3	Ball bearing 6202DDW		1			
006	266211-9	Binding head tapping screw 5X40		4			
007	142841-9	Gear housing complete		1			
C10	263002-9	Rubber pin 4		1			
008	211499-6	Ball bearing 626ZZ		1			
009	226028-2	Gear complete 7-41		1			
010	253804-1	Flat washer 6		1			
011	256180-2	Pin 3		1			
012A	257018-4	Ring 15		1	*		
012-1A	257018-4	Ring 15	O	1			
012-1B	257018-4	Ring 15		1			
013	221261-1	Spur gear 47		1			
014	961054-1	Retaining ring (EXT) S-14		1			
016	442207-6	Gasket		1			
017	142840-1	Gear housing cover complete		1			
C10	263002-9	Rubber pin 4		1			
018	210029-0	Ball bearing 608ZZ		1			
019	241850-6	Fan 60		1			
020	513914-9	Armature assembly 240V		1			
020		INC. 18,19,21,22					
021	681644-1	Insulation washer		1			
022	210029-0	Ball bearing 608ZZ		1			
023	455343-9	Baffle plate		1			
024	594654-8	Field assembly 240V		1			
C10	654020-2	Ring terminal 36L		2			
C21	654485-8	Non-insulated splice		2			
025	266418-7	Binding head tapping screw 5X55		2			
026A	644500-6	Holder cap		2	*		
026-1A	643750-0	Holder cap 7-11	O	2			
026-1B	643750-0	Holder cap 7-11		2			
027A	191963-2	Carbon brush set CB-303		1	*		
027-1A	194996-6	Carbon brush set CB-303	O	1			
027-1B	194996-6	Carbon brush set CB-303		1			
028	850V85-6	Name plate M6600		1			

029A	143121-6	Motor housing complete		1			
C10	644501-4	Brush holder 5X11		2			
029B	143260-2	Motor housing complete		1			
C10	644501-4	Brush holder 5X11		2			
030	424654-3	Cap		1			
031	266326-2	Binding head tapping screw 4X18		3			
032A	187944-2	Switch handle set		1	*		
032A		INC. 43			*		
032-1A	187943-4	Switch handle set	<	1	*		
032-1A		INC. 43			*		
032-2A	183S62-8	Switch handle set	S	1			
032-2A		INC. 43					
032-2B	183S61-0	Switch handle set		1			
032-2B		INC. 43					
033A	650714-7	Switch TN04-6/1BEK		1	*		
033-1A	650004-8	Switch TN04-6/1BEK	S	1			
033-1B	650004-8	Switch TN04-6/1BEK		1			
034	645190-8	Noise suppressor		1			
038	266326-2	Binding head tapping screw 4X18		2			
039	687124-5	Strain relief		1			
040	682516-3	Cord guard 9.3-85		1	*		
040-1	682504-0	Cord guard 10-85	O	1			
041A	665852-2	Power supply cord 1.0-2-2.0		1	*		
041-1A	695454-0	Power supply cord 1.0-2-2.0	O	1	*		
041-2A	665852-2	Power supply cord 1.0-2-2.0	O	1			
041-2B	665852-2	Power supply cord 1.0-2-2.0		1			
042	266326-2	Binding head tapping screw 4X18		4			
043A	187944-2	Switch handle set		1	*		
043A		INC. 32			*		
043-1A	187943-4	Switch handle set	<	1	*		
043-1A		INC. 32			*		
043-2A	183S62-8	Switch handle set	S	1			
043-2A		INC. 32					
043-2B	183S61-0	Switch handle set		1			
043-2B		INC. 32					
A01	142088-5	Grip 36 complete		1			
A02	781010-3	Wrench 19		1			