Model No.M6002 Drill

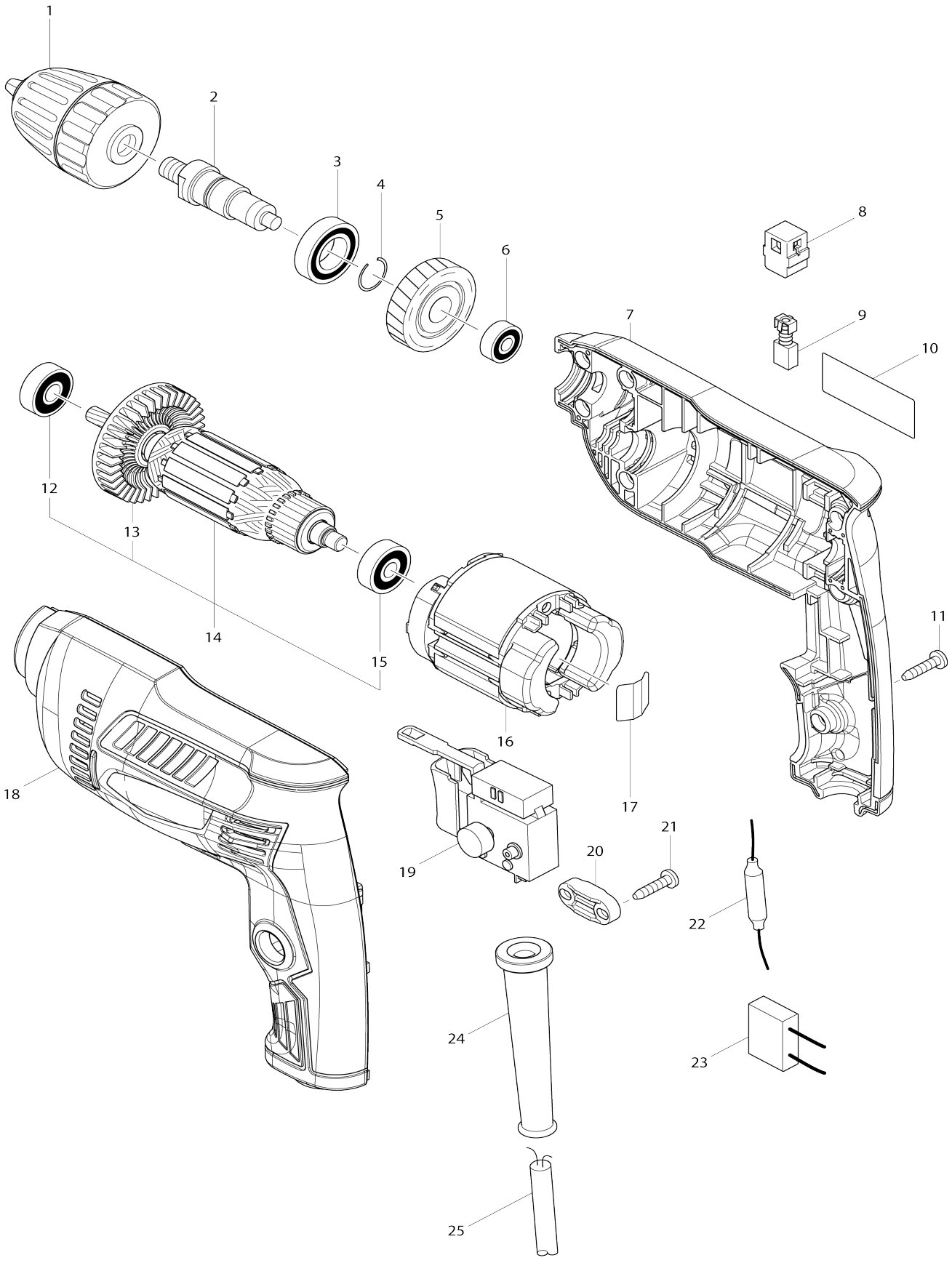

Model No.M6002 Drill

Item No.	Parts No.	Description	Interchangeability	Q'ty	New/ Old	Note1	Note2
001	766026-9	Keyless drill chuck 10		1			
002	324376-4	Spindle		1			
003	211242-3	Ball bearing 6902ZZ		1	*		
003-1	210153-9	Ball bearing 6902ZZ	O	1			
004	233925-5	Ring spring 13		1			
005	226578-7	Helical gear 35		1			
006	210028-2	Ball bearing 606ZZ		1	*		
006-1	210137-7	Ball bearing 606ZZ	O	1			
007	183B08-2	Housing set		1	*		
007		INC. 18			*		
007-1	183B95-1	Housing set	<	1	*		
007-1		INC. 18			*		
007-2	183D53-9	Housing set	<	1			
007-2		INC. 18					
008	643566-3	Brush holder 5X8		2			
009	191998-3	Carbon brush set CB-85		1	*		
009-1	194973-8	Carbon brush set CB-85	O	1			
010	850X32-9	Name plate M6002		1			
011	266326-2	Binding head tapping screw 4X18		7			
012	210029-0	Ball bearing 608ZZ		1	*		
012-1	210046-0	Ball bearing 608ZZ	O	1			
013	240066-0	Fan 52		1			
014	515849-0	Armature assembly 240V		1			
014		INC. 12,13,15					
015	210030-5	Ball bearing 627ZZ		1	*		
015-1	210050-9	Ball bearing 627ZZ	O	1			
016	639358-6	Field 240V		1	*		
016-1	639072-4	Field	S	1			
017	232210-3	Leaf spring		1			
018	183B08-2	Housing set		1	*		
018		INC. 7			*		
018-1	183B95-1	Housing set	<	1	*		
018-1		INC. 7			*		
018-2	183D53-9	Housing set	<	1			
018-2		INC. 7					
019	650551-9	Switch FA1-3/2BEZ-4		1			
020	687124-5	Strain relief		1			
021	266326-2	Binding head tapping screw 4X18		2			
022	646147-2	Choke coil		1			
023	645190-8	Noise suppressor		1			
024	682569-2	Cord guard 8-85		1	*		
024-1	682583-8	Cord guard	O	1			
025	665383-1	Power supply cord 1.0-2-2.0		1	*		
025-1	695556-2	Power supply cord 1.0-2-2.0	O	1	*		
025-2	665383-1	Power supply cord 1.0-2-2.0	O	1			