Model No.M3601 Router

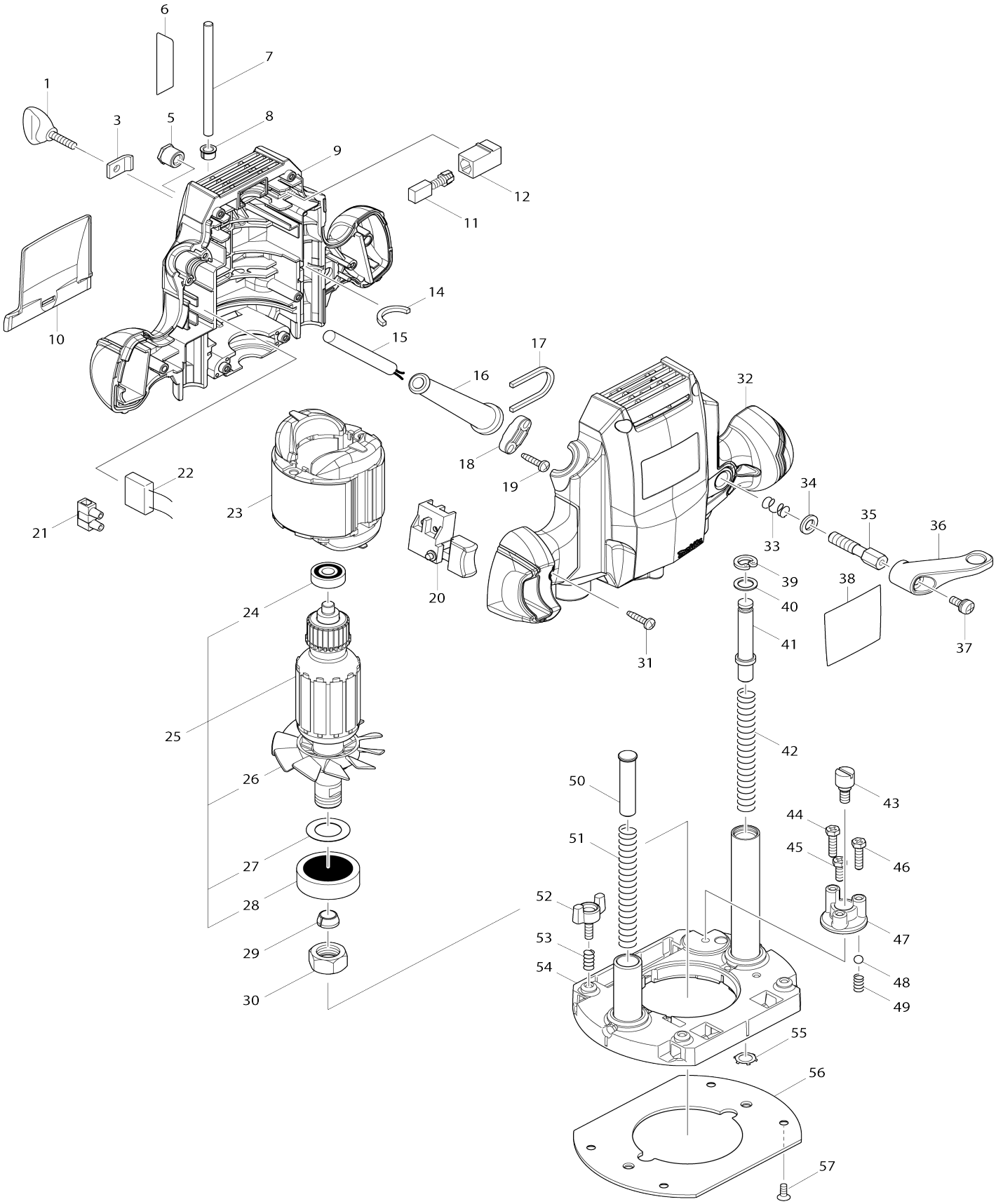

# Model No.M3601 Router

| Item No. | Parts No. | Description | Interchangeability | Q'ty | New/ Old | Note1 | Note2 |
|---|---|---|---|---|---|---|---|
| 001 | 251878-6 | Thumb screw M5X20 | | 1 | | | |
| 003 | 346007-5 | Pressure plate | | 1 | | | |
| 005 | 252094-3 | Hex. nut M8 | | 1 | | | |
| 006 | 893386-7 | Scale label | | 1 | | | |
| 007 | 321948-6 | Stopper pole | | 1 | | | |
| 008 | 451035-8 | Pointer | | 1 | | | |
| 009 | 183E23-4 | Housing set | | 1 | * | | |
| C10 | 263002-9 | Rubber pin 4 | | 3 | * | | |
| C20 | 263005-3 | Rubber pin 6 | | 1 | * | | |
| C30 | 931202-6 | Hex. nut M5 | | 1 | * | | |
| 009 | | INC. 32 | | | * | | |
| 009-1 | 183V52-9 | Housing set | < | 1 | | | |
| C10 | 263002-9 | Rubber pin 4 | | 3 | | | |
| C20 | 263005-3 | Rubber pin 6 | | 1 | | | |
| C30 | 931202-6 | Hex. nut M5 | | 1 | | | |
| 009-1 | | INC. 32 | | | | | |
| 010 | 450820-6 | Chip deflector | | 1 | | | |
| 011 | 181410-1 | Carbon brush CB-106 (2 pcs) | | 1 | * | | |
| 011-1 | 194976-2 | Carbon brush set CB-106 | O | 1 | | | |
| 012 | 643601-7 | Brush holder 6-10 | | 2 | | | |
| 014 | 443073-4 | Felt | | 1 | | | |
| 015 | 665852-2 | Power supply cord 1.0-2-2.0 | | 1 | * | | |
| 015-1 | 695454-0 | Power supply cord 1.0-2-2.0 | O | 1 | * | | |
| 015-2 | 665852-2 | Power supply cord 1.0-2-2.0 | O | 1 | | | |
| 016 | 682516-3 | Cord guard 9.3-85 | | 1 | * | | |
| 016-1 | 682504-0 | Cord guard 10-85 | O | 1 | | | |
| 017 | 443074-2 | Felt | | 1 | | | |
| 018 | 687124-5 | Strain relief | | 1 | | | |
| 019 | 266326-2 | Binding head tapping screw 4X18 | | 2 | | | |
| 020 | 650218-9 | Switch FA1-6/1W-1 | | 1 | | | |
| 021 | 654532-5 | Terminal block 1P | | 1 | | | |
| 022 | 645200-1 | Noise suppressor | | 1 | | | |
| 023 | 594594-0 | Field assembly 240V | | 1 | * | | |
| C10 | 654037-5 | Insulated terminal FVWS1.25-M3 | | 2 | * | | |
| 023-1 | 590054-0 | Field assembly 240V | O | 1 | | | |
| C10 | 654409-4 | Insulated terminal VR1.25-3.5LB | O | 2 | | | |
| 024 | 210029-0 | Ball bearing 608ZZ | | 1 | | | |
| 025 | 510205-9 | Armature assembly 240V | | 1 | | | |
| 025 | | INC. 24,26-28 | | | | | |
| 026 | 240123-4 | Fan 72 | | 1 | | | |
| 027 | 267114-0 | Flat washer 17 | | 1 | | | |
| 028 | 211285-5 | Ball bearing 6203DDW | | 1 | * | | |
| 028-1 | 210239-9 | Ball bearing 6203DDW | O | 1 | | | |
| 029 | 763636-3 | Collet cone 6 | | 1 | | | |
| 030 | 763615-1 | Collet nut | | 1 | | | |
| 031 | 266326-2 | Binding head tapping screw 4X18 | | 7 | | | |

| | | | | | | | |
|---|---|---|---|---|---|---|---|
| 032 | 183E23-4 | Housing set | | 1 | * | | |
| C10 | 263002-9 | Rubber pin 4 | | 3 | * | | |
| C20 | 263005-3 | Rubber pin 6 | | 1 | * | | |
| C30 | 931202-6 | Hex. nut M5 | | 1 | * | | |
| 032 | | INC. 9 | | | * | | |
| 032-1 | 183V52-9 | Housing set | < | 1 | | | |
| C10 | 263002-9 | Rubber pin 4 | | 3 | | | |
| C20 | 263005-3 | Rubber pin 6 | | 1 | | | |
| C30 | 931202-6 | Hex. nut M5 | | 1 | | | |
| 032-1 | | INC. 9 | | | | | |
| 033 | 233110-0 | Compression spring 8 | | 1 | | | |
| 034 | 941202-8 | Flat washer 8 | | 1 | | | |
| 035 | 266920-0 | Set bolt M8 | | 1 | | | |
| 036 | 450821-4 | Lever 47 | | 1 | | | |
| 037 | 911213-7 | Pan head screw M5X12 WR | | 1 | | | |
| 038 | 852C08-6 | Name plate M3601 | | 1 | | | |
| 039 | 962065-9 | Retaining ring (INT) round R-15 | | 1 | | | |
| 040 | 267047-9 | Flat washer 10 | | 1 | | | |
| 041 | 451524-3 | Collar HD. pin 10 | | 1 | | | |
| 042 | 231416-0 | Compression spring 10 | | 1 | | | |
| 043 | 251447-3 | Slotted flat head shoulder screw M6 | | 1 | | | |
| 044 | 265587-1 | Hex. head bolt M5X20 | | 1 | | | |
| 045 | 265586-3 | Hex. head bolt M5X14 | | 1 | | | |
| 046 | 265587-1 | Hex. head bolt M5X20 | | 1 | | | |
| 047 | 135264-8 | Stopper assembly | | 1 | | | |
| 047 | | INC. 43-46 | | | | | |
| 048 | 216022-2 | Steel ball 7.0 | | 1 | | | |
| 049 | 231419-4 | Compression spring 5 | | 1 | | | |
| 050 | 256651-9 | Flat fillister HD. pin 10 | | 1 | | | |
| 051 | 231417-8 | Compression spring 10 | | 1 | | | |
| 052 | 265761-1 | Thumb screw M5X16 | | 2 | | | |
| 053 | 231240-1 | Compression spring 7 | | 2 | | | |
| 054 | 158808-7 | Base complete | | 1 | | | |
| 055 | 259019-8 | Self lock 15 | | 2 | | | |
| 056 | 452913-5 | Base plate | | 1 | | | |
| 057 | 912112-6 | Countersunk head screw M4X10 | | 4 | | | |
| A01 | 164834-6 | Straight guide | | 1 | | | |
| A02 | 781006-4 | Wrench 13 | | 1 | * | | |
| A02-1 | 781039-9 | Wrench 13 | O | 1 | | | |
| A03 | 781011-1 | Wrench 22 | | 1 | * | | |
| A03-1 | 781043-8 | Wrench 22 | O | 1 | | | |
| A04 | 733239-7 | Straight bit 6 | | 1 | * | | |
| A04-1 | 191Y83-2 | Straight bit 6 set | O | 1 | | | |
| A05 | 194733-8 | Dust nozzle set | | 1 | | | |
| C10 | 213022-3 | O-ring 3 | | 2 | | | |
| C20 | 265774-2 | Thumb screw M4X19 | | 1 | | | |